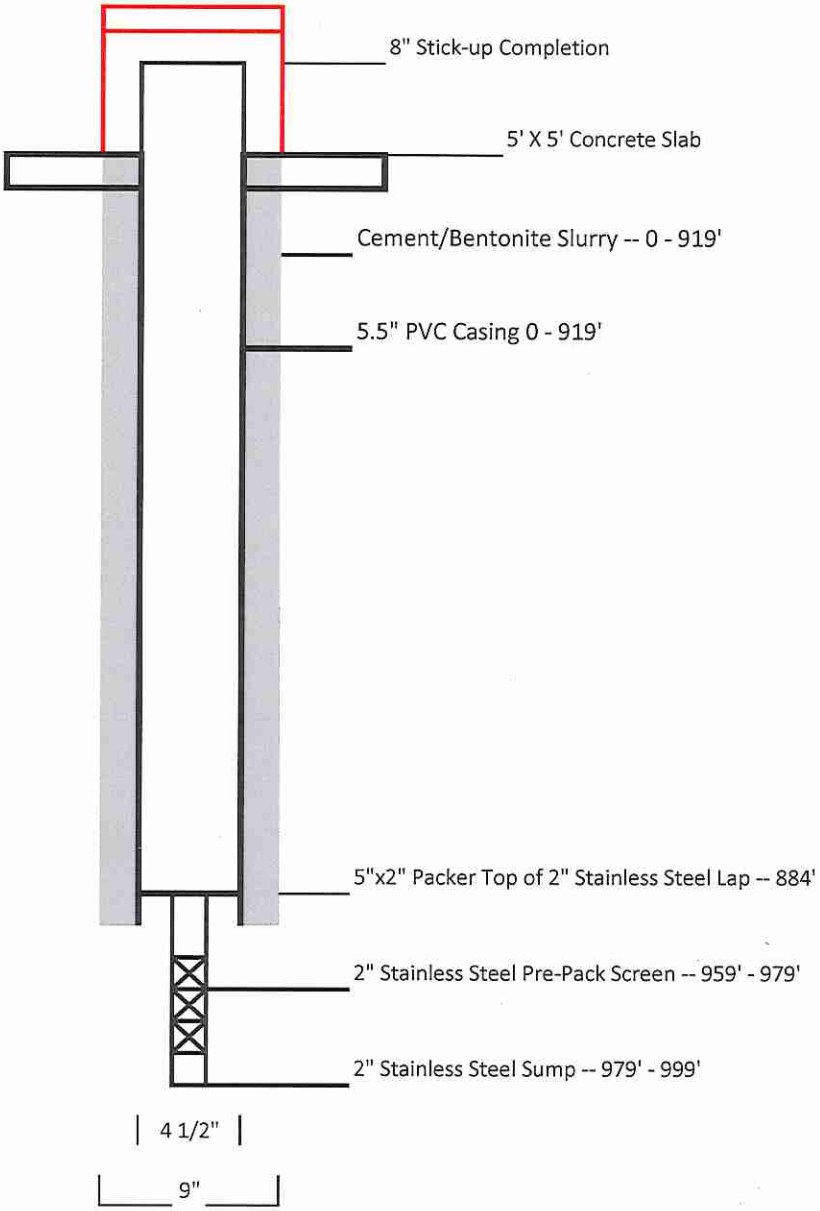

Walker-Hill Environmental, Inc.
Foxworth, MS

Typical Deep 2" Monitoring Well Construction Diagram
Helis Oil and Gas - St. Tammany, LA
Well No. - HMW-01

MAIL ORIGINAL TO:
Louisiana Dept. of Natural Resources
Attn: Ground Water Resources
P.O. Box 94275
Baton Rouge, LA 70804-9275
(225) 342-8244 Ph.
(225) 242-3505 Fax

LOUISIANA DEPARTMENT OF NATURAL RESOURCES
OFFICE OF CONSERVATION, ENVIRONMENTAL DIVISION
WATER WELL REGISTRATION SHORT FORM (DNR-GW-1S)

ONLINE ACCESS:
1) Go to http://sonris.com/
2) Click on **Data Access** in the left hand panel.
3) Under the section labeled **Conservation**, click on **Ground Water Information.**

1. **USE OF WELL** (Check appropriate box):
   ☐Domestic ☐Rig Supply ■Monitoring
   ☐Piezometer ☐Heat Pump Hole ☐Heat Pump Supply
   ☐Recovery ☐Relief ☐Abandoned Pilot Hole
   ☐Other *(please specify)*_____
2. **WELL OWNER:** Helis Oil and Gas
   Phone: (504) 523-1831
3. **WELL OWNER'S ADDRESS:** 228 St. Charles Avenue #912
   New Orleans, LA 70130
4. **OWNER'S WELL NUMBER OR NAME:** HMW-01
   Serial Number (Rig Supply Only):_____
5. **WELL INFORMATION:**
   Date completed: 7/21/15
   Depth of Hole: 1020 ft. below ground surface
   Depth of Well: 999 ft.
   Static water level: 3 ft. below ground surface
   Date Measured: 7/24/15
   Casing: 5.5 in. ☐Metal ■Plastic ☐Other Length: 919 ft.
   Screen: 2 in. ■Metal ☐Plastic ☐Other Slot size: .010 in.
   Length: 20 ft. Cemented from: 919 ft. to ground surface
   Using: ■ Pump down Method ☐Gravity Method
6. **LOCATION OF WELL:**
   Latitude: 30 ° 23 ' 14 " Longitude: 89 ° 58 ' 42 "
   Parish: St. Tammany
   Physical Address: Site has no address
   Well is Near, St. Tammany Approximately 1.5 miles from
   (Crossroads, Railroad, any Landmark, etc.) S of intersection of Hwy 1
   S of intersection of Hwy 1088 & Log Cabin Rd W side of Log Cabin Rd
   (Attach a map or sketch or registered plat if Rig Supply to registration)

FOR MONITOR/PIEZO/RECOVERY WELLS ONLY				
SECTION	TOWNSHIP	RANGE	ELEVATION	QUAD NO.
0 0 3	0 8 S	1 2 E	0 0 3 3	1 5 8 A

7. **REMARKS:** Screen is 2" Pre-pack Stainless Steel (959'-979')
   5x2 inch packer top of 2"SS lap at 884ft,
   20 ft X 2" SS sump below screen

8. **DRILLER'S LOG:**
   (Description and color of cuttings, such as shale, sand, etc. in feet below ground surface)

FROM	TO	DESCRIPTION
0	15	clay
15	25	sand
25	95	clay
95	140	sand/clay
140	520	sand/gravel
520	560	clay/sand
560	710	clay/shell
710	740	sand
740	920	clay/shell
920	1000	sand
1000	1020	sand/shell

9. **FOR HEAT PUMP ONLY:** Avg. Depth: _____ft. # of Holes: _____
10. **DOES THE NEW WELL REPLACE AN EXISTING WELL?** ☐Yes ■No
    If **yes**, has owner been informed of state regulations requiring plugging of abandoned wells? ☐Yes ☐No
11. **NAME OF PERSON WHO DRILLED THE WELL:** Gary Hill

I certify that this work was done and completed in accordance with Rules and Regulations of the State of Louisiana, including Chapter XII of Title 51, Public Health – Sanitary Code, if applicable, on: 7/21/15 ***(Date)***
by: Walker-Hill Environmental, Inc ***(Name of Water Well Contractor),***
License No. WWC- 574
Authorized Signature: Gary P Hill **Date:** 8-12-15

FOR OFFICE USE ONLY

PARISH	WELL NO.	GEOLOGIC UNIT

LATITUDE	LONGITUDE	SECTION

TOWNSHIP	RANGE	ELEVATION	QUAD NO.

REGISTERED BY: _____ DATE: _____
INSPECTED BY: _____ DATE: _____
REMARKS: _____

DNR-GW-1S (Rev. 10/12)

PRINT FORM

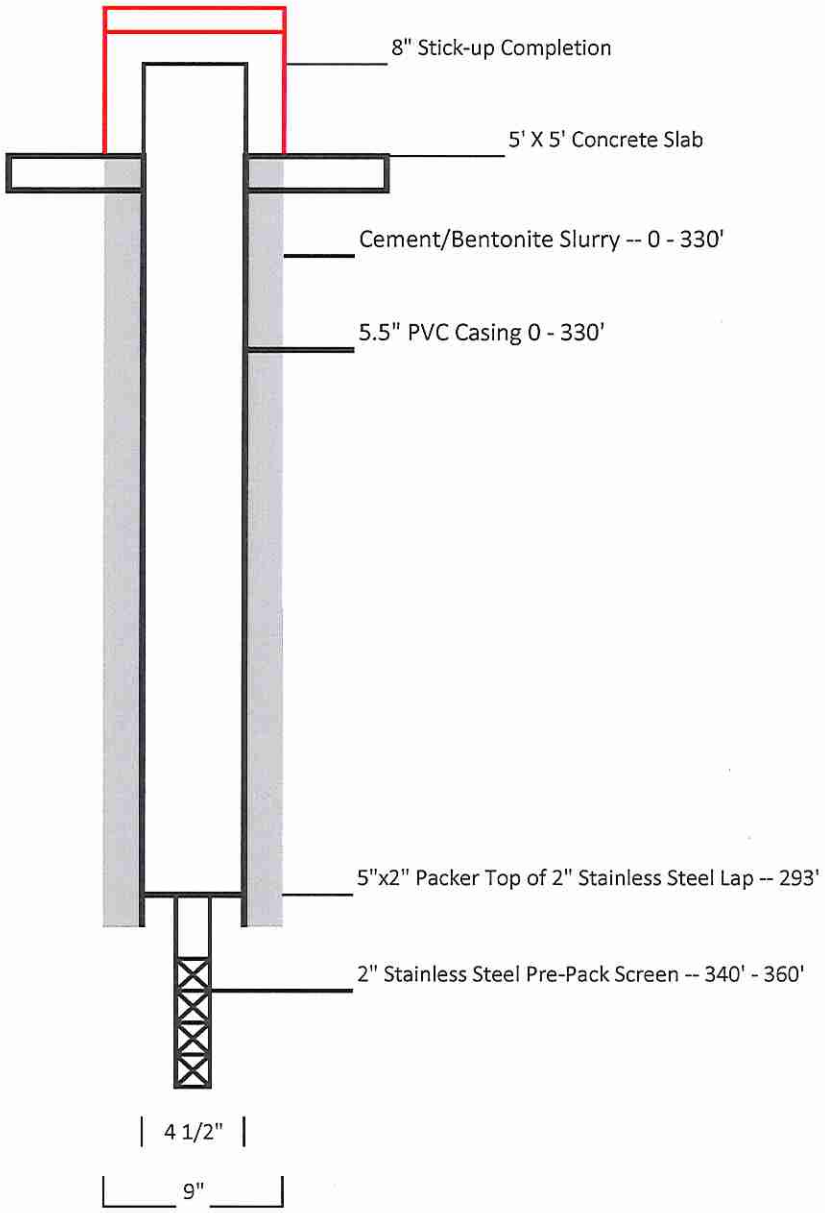

Walker-Hill Environmental, Inc.
Foxworth, MS

Typical Deep 2" Monitoring Well Construction Diagram
Helis Oil and Gas - St. Tammany, LA
Well No. - HMW-02

MAIL ORIGINAL TO:
Louisiana Dept. of Natural Resources
Attn: Ground Water Resources
P.O. Box 94275
Baton Rouge, LA 70804-9275
(225) 342-8244 Ph.
(225) 242-3505 Fax

LOUISIANA DEPARTMENT OF NATURAL RESOURCES
OFFICE OF CONSERVATION, ENVIRONMENTAL DIVISION
WATER WELL REGISTRATION SHORT FORM (DNR-GW-1S)

ONLINE ACCESS:
1) Go to http://sonris.com/
2) Click on **Data Access** in the left hand panel.
3) Under the section labeled **Conservation**, click on **Ground Water Information.**

1. **USE OF WELL** (Check appropriate box):
   ☐Domestic ☐Rig Supply ■Monitoring
   ☐Piezometer ☐Heat Pump Hole ☐Heat Pump Supply
   ☐Recovery ☐Relief ☐Abandoned Pilot Hole
   ☐Other *(please specify)*_____
2. **WELL OWNER:** Helis Oil and Gas
   Phone: (504) 523-1831
3. **WELL OWNER'S ADDRESS:** 228 St. Charles Avenue #912
   New Orleans, LA 70130
4. **OWNER'S WELL NUMBER OR NAME:** HMW-02
   Serial Number (Rig Supply Only):_____
5. **WELL INFORMATION:**
   Date completed: 7/28/15
   Depth of Hole: 360 ft. below ground surface
   Depth of Well: 360 ft.
   Static water level: 27 ft. below ground surface
   Date Measured: 7/30/15
   Casing: 5.5 in. ☐Metal ■Plastic ☐Other Length: 330 ft.
   Screen: 2 in. ■Metal ☐Plastic ☐Other Slot size: .010 in.
   Length: 20 ft. Cemented from: 330 ft. to ground surface
   Using: ■ Pump down Method ☐Gravity Method
6. **LOCATION OF WELL:**
   Latitude: 30 ° 23 ' 14 " Longitude: 89 ° 58 ' 42 "
   Parish: St. Tammany
   Physical Address: Site has no address
   Well is Near, St. Tammany Approximately 1.5 miles from
   (Crossroads, Railroad, any Landmark, etc.) S of intersection of Hwy 1
   S of intersection of Hwy 1088 & Log Cabin Rd W side of Log Cabin Rd
   (Attach a map or sketch or registered plat if Rig Supply to registration)

FOR MONITOR/PIEZO/RECOVERY WELLS ONLY				
SECTION	TOWNSHIP	RANGE	ELEVATION	QUAD NO.
0 0 3	0 8 S	1 2 E	0 0 3 3	1 5 8 A

7. **REMARKS:** Screen is 2" Pre-pack Stainless Steel (340'-360')
   5" X2' packer top of 2" SS lap pipe at 293ft

8. **DRILLER'S LOG:**
   (Description and color of cuttings, such as shale, sand, etc. in feet below ground surface)

FROM	TO	DESCRIPTION
0	15	clay
15	25	sand
25	95	clay
95	140	sand/clay
140	360	sand/gravel

9. **FOR HEAT PUMP ONLY:** Avg. Depth: _____ft. # of Holes: _____
10. **DOES THE NEW WELL REPLACE AN EXISTING WELL?** ☐Yes ■No
    If **yes**, has owner been informed of state regulations requiring plugging of abandoned wells? ☐Yes ☐No
11. **NAME OF PERSON WHO DRILLED THE WELL:** Gary Hill

I certify that this work was done and completed in accordance with Rules and Regulations of the State of Louisiana, including Chapter XII of Title 51, Public Health – Sanitary Code, if applicable, on: 7/28/15 ***(Date)***
by: Walker-Hill Environmental, Inc ***(Name of Water Well Contractor),***
License No. WWC- 574
Authorized Signature: Gary P Hill **Date:** 8-12-15

FOR OFFICE USE ONLY

PARISH	WELL NO.	GEOLOGIC UNIT

LATITUDE	LONGITUDE	SECTION

TOWNSHIP	RANGE	ELEVATION	QUAD NO.

REGISTERED BY: _____ DATE: _____
INSPECTED BY: _____ DATE: _____
REMARKS: _____

PRINT FORM

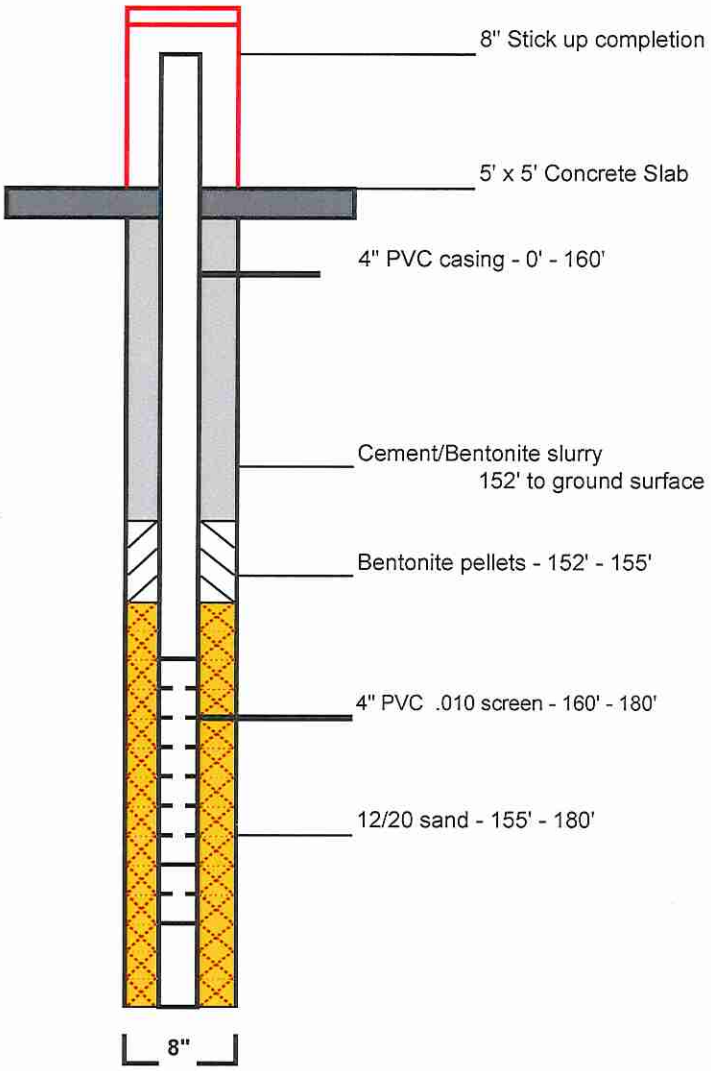

Walker-Hill Environmental, Inc.
Foxworth, MS

Typical 4" Monitoring Well Construction Diagram
Helis Oil and Gas - St. Tammany, LA
Well No. - HMW-03

MAIL ORIGINAL TO:
Louisiana Dept. of Natural Resources
Attn: Ground Water Resources
P.O. Box 94275
Baton Rouge, LA 70804-9275
(225) 342-8244 Ph.
(225) 242-3505 Fax

LOUISIANA DEPARTMENT OF NATURAL RESOURCES
OFFICE OF CONSERVATION, ENVIRONMENTAL DIVISION
WATER WELL REGISTRATION SHORT FORM (DNR-GW-1S)

ONLINE ACCESS:
1) Go to http://sonris.com/
2) Click on **Data Access** in the left hand panel.
3) Under the section labeled **Conservation**, click on **Ground Water Information.**

1. **USE OF WELL** (Check appropriate box):
   ☐Domestic ☐Rig Supply ■Monitoring
   ☐Piezometer ☐Heat Pump Hole ☐Heat Pump Supply
   ☐Recovery ☐Relief ☐Abandoned Pilot Hole
   ☐Other *(please specify)*_____
2. **WELL OWNER:** Helis Oil and Gas
   Phone: (504) 523-1831
3. **WELL OWNER'S ADDRESS:** 228 St. Charles Avenue #912
   New Orleans, LA 70130
4. **OWNER'S WELL NUMBER OR NAME:** HMW-03
   Serial Number (Rig Supply Only):_____
5. **WELL INFORMATION:**
   Date completed: 7/18/15
   Depth of Hole: 180 ft. below ground surface
   Depth of Well: 180 ft.
   Static water level: 28 ft. below ground surface
   Date Measured: 7/21/15
   Casing: 4 in. ☐Metal ■Plastic ☐Other Length: 160 ft.
   Screen: 4 in. ☐Metal ■Plastic ☐Other Slot size: .010 in.
   Length: 20 ft. Cemented from: 152 ft. to ground surface
   Using: ■ Pump down Method ☐Gravity Method
6. **LOCATION OF WELL:**
   Latitude: 30 ° 23 ' 14 " Longitude: 89 ° 58 ' 41 "
   Parish: St. Tammany
   Physical Address: Site has no address
   Well is Near, St. Tammany Approximately 1.5 miles from
   (Crossroads, Railroad, any Landmark, etc.) S of intersection of Hwy 1
   S of intersection of Hwy 1088 & Log Cabin Rd W side of Log Cabin Rd
   (Attach a map or sketch or registered plat if Rig Supply to registration)

FOR MONITOR/PIEZO/RECOVERY WELLS ONLY				
SECTION	TOWNSHIP	RANGE	ELEVATION	QUAD NO.
0 0 3	0 8 S	1 2 E	0 0 3 3	1 5 8 A

7. **REMARKS:**

8. **DRILLER'S LOG:**
   (Description and color of cuttings, such as shale, sand, etc. in feet below ground surface)

FROM	TO	DESCRIPTION
0	15	clay
15	25	sand
25	95	clay
95	140	sand/clay
140	180	sand/gravel

9. **FOR HEAT PUMP ONLY:** Avg. Depth: _____ft. # of Holes: _____
10. **DOES THE NEW WELL REPLACE AN EXISTING WELL?** ☐Yes ■No
    If **yes**, has owner been informed of state regulations requiring plugging of abandoned wells? ☐Yes ☐No
11. **NAME OF PERSON WHO DRILLED THE WELL:** Timmy Beach

I certify that this work was done and completed in accordance with Rules and Regulations of the State of Louisiana, including Chapter XII of Title 51, Public Health – Sanitary Code, if applicable, on: 7/18/15 ***(Date)***
by: Walker-Hill Environmental, Inc ***(Name of Water Well Contractor),***
License No. WWC- 574
Authorized Signature: Gary P Hill **Date:** 8-12-15

FOR OFFICE USE ONLY

PARISH	WELL NO.	GEOLOGIC UNIT

LATITUDE	LONGITUDE	SECTION

TOWNSHIP	RANGE	ELEVATION	QUAD NO.

REGISTERED BY: _____ DATE: _____
INSPECTED BY: _____ DATE: _____
REMARKS: _____

PRINT FORM

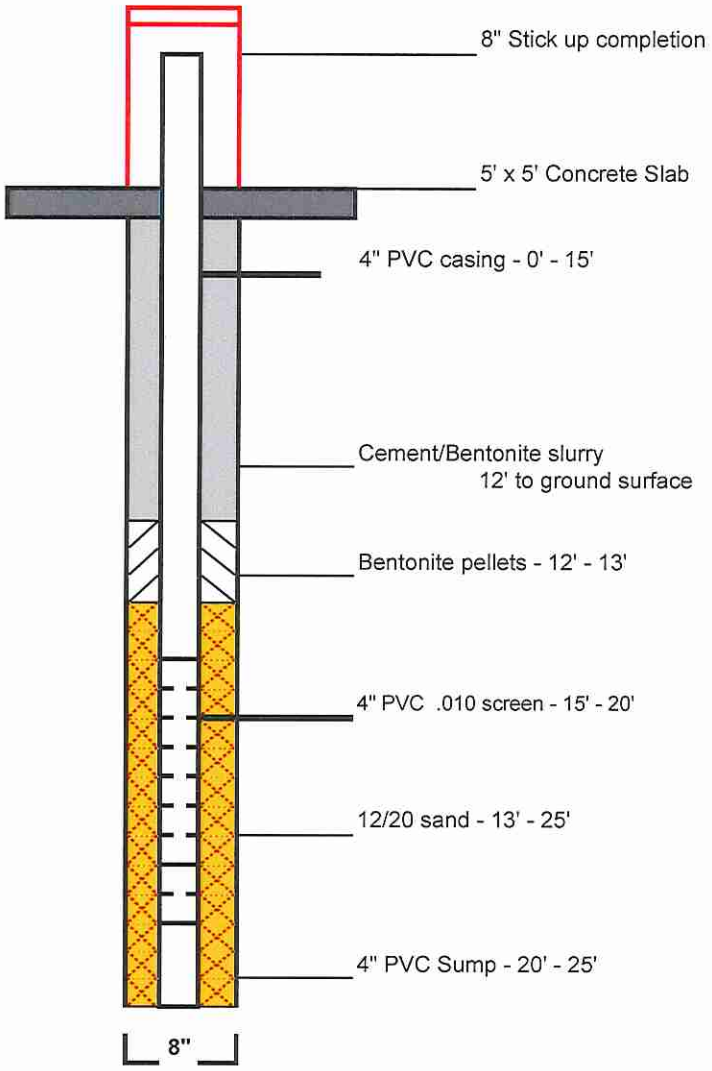

Walker-Hill Environmental, Inc.
Foxworth, MS

Typical 4" Monitoring Well Construction Diagram
Helis Oil and Gas - St. Tammany, LA
Well No. - HMW-04

MAIL ORIGINAL TO:
Louisiana Dept. of Natural Resources
Attn: Ground Water Resources
P.O. Box 94275
Baton Rouge, LA 70804-9275
(225) 342-8244 Ph.
(225) 242-3505 Fax

LOUISIANA DEPARTMENT OF NATURAL RESOURCES
OFFICE OF CONSERVATION, ENVIRONMENTAL DIVISION
WATER WELL REGISTRATION SHORT FORM (DNR-GW-1S)

ONLINE ACCESS:
1) Go to http://sonris.com/
2) Click on **Data Access** in the left hand panel.
3) Under the section labeled **Conservation**, click on **Ground Water Information.**

1. **USE OF WELL** (Check appropriate box):
   ☐Domestic ☐Rig Supply ■Monitoring
   ☐Piezometer ☐Heat Pump Hole ☐Heat Pump Supply
   ☐Recovery ☐Relief ☐Abandoned Pilot Hole
   ☐Other *(please specify)*_____
2. **WELL OWNER:** Helis Oil and Gas
   Phone: (504) 523-1831
3. **WELL OWNER'S ADDRESS:** 228 St. Charles Avenue #912
   New Orleans, LA 70130
4. **OWNER'S WELL NUMBER OR NAME:** HMW-04
   Serial Number (Rig Supply Only):_____
5. **WELL INFORMATION:**
   Date completed: 7/20/15
   Depth of Hole: 25 ft. below ground surface
   Depth of Well: 25 ft.
   Static water level: 7 ft. below ground surface
   Date Measured: 7/22/15
   Casing: 4 in. ☐Metal ■Plastic ☐Other Length: 15 ft.
   Screen: 4 in. ☐Metal ■Plastic ☐Other Slot size: .010 in.
   Length: 5 ft. Cemented from: 12 ft. to ground surface
   Using: ■ Pump down Method ☐Gravity Method
6. **LOCATION OF WELL:**
   Latitude: 30 ° 23 ' 14 " Longitude: 89 ° 58 ' 41 "
   Parish: St. Tammany
   Physical Address: Site has no address
   Well is Near, St. Tammany Approximately 1.5 miles from
   (Crossroads, Railroad, any Landmark, etc.) S of intersection of Hwy 1
   S of intersection of Hwy 1088 & Log Cabin Rd W side of Log Cabin Rd
   (Attach a map or sketch or registered plat if Rig Supply to registration)

FOR MONITOR/PIEZO/RECOVERY WELLS ONLY

SECTION	TOWNSHIP	RANGE	ELEVATION	QUAD NO.
003	08S	12E	0033	158A

7. **REMARKS:** 5' sump below well screen

8. **DRILLER'S LOG:**
   (Description and color of cuttings, such as shale, sand, etc. in feet below ground surface)

FROM	TO	DESCRIPTION
0	15	clay
15	25	sand

9. **FOR HEAT PUMP ONLY:** Avg. Depth: _____ft. # of Holes: _____
10. **DOES THE NEW WELL REPLACE AN EXISTING WELL?** ☐Yes ■No
    If **yes**, has owner been informed of state regulations requiring plugging of abandoned wells? ☐Yes ☐No
11. **NAME OF PERSON WHO DRILLED THE WELL:** Timmy Beach

I certify that this work was done and completed in accordance with Rules and Regulations of the State of Louisiana, including Chapter XII of Title 51, Public Health – Sanitary Code, if applicable, on: 7/20/15 ***(Date)***
by: Walker-Hill Environmental, Inc ***(Name of Water Well Contractor),***
License No. WWC- 574
Authorized Signature: Gary P Hill **Date:** 8-12-15

FOR OFFICE USE ONLY

PARISH | WELL NO. | GEOLOGIC UNIT
LATITUDE | LONGITUDE | SECTION
TOWNSHIP | RANGE | ELEVATION | QUAD NO.

REGISTERED BY: _____ DATE: _____
INSPECTED BY: _____ DATE: _____
REMARKS: _____

PRINT FORM

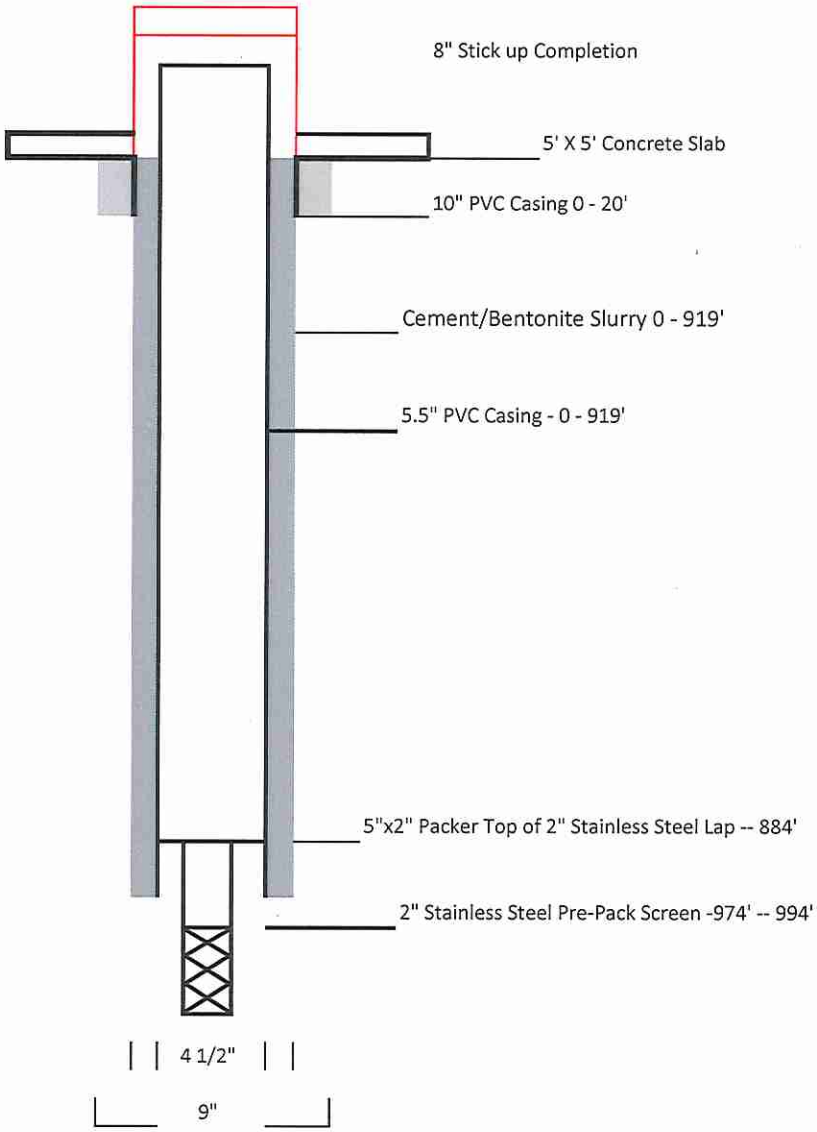

Walker-Hill Environmental, Inc.
Foxworth, MS

Typical Deep 2" Observation Well Construction Diagram
Helis Oil and Gas - St. Tammany, LA
Well No. - HMW-05

MAIL ORIGINAL TO:
Louisiana Dept. of Natural Resources
Attn: Ground Water Resources
P.O. Box 94275
Baton Rouge, LA 70804-9275
(225) 342-8244 Ph.
(225) 242-3505 Fax

LOUISIANA DEPARTMENT OF NATURAL RESOURCES
OFFICE OF CONSERVATION, ENVIRONMENTAL DIVISION
WATER WELL REGISTRATION SHORT FORM (DNR-GW-1S)

ONLINE ACCESS:
1) Go to http://sonris.com/
2) Click on **Data Access** in the left hand panel.
3) Under the section labeled **Conservation**, click on **Ground Water Information.**

1. **USE OF WELL** (Check appropriate box):
   ☐Domestic ☐Rig Supply ■Monitoring
   ☐Piezometer ☐Heat Pump Hole ☐Heat Pump Supply
   ☐Recovery ☐Relief ☐Abandoned Pilot Hole
   ☐Other *(please specify)*_____
2. **WELL OWNER:** Helis Oil and Gas
   Phone: (504) 523-1831
3. **WELL OWNER'S ADDRESS:** 228 St. Charles Avenue #912
   New Orleans, LA 70130
4. **OWNER'S WELL NUMBER OR NAME:** HMW-05
   Serial Number (Rig Supply Only):_____
5. **WELL INFORMATION:**
   Date completed: 7/31/15
   Depth of Hole: 994 ft. below ground surface
   Depth of Well: 994 ft.
   Static water level: 3 ft. below ground surface
   Date Measured: 8/2/15
   Casing: 5.5 in. ☐Metal ■Plastic ☐Other Length: 919 ft.
   Screen: 2 in. ■Metal ☐Plastic ☐Other Slot size: .010 in.
   Length: 20 ft. Cemented from: 919 ft. to ground surface
   Using: ■ Pump down Method ☐Gravity Method
6. **LOCATION OF WELL:**
   Latitude: 30 ° 23 ' 17 " Longitude: 89 ° 58 ' 41 "
   Parish: St. Tammany
   Physical Address: Site has no address
   Well is Near, St. Tammany Approximately 1.5 miles from
   (Crossroads, Railroad, any Landmark, etc.) S of intersection of Hwy 1
   S of intersection of Hwy 1088 & Log Cabin Rd W side of Log Cabin Rd
   (Attach a map or sketch or registered plat if Rig Supply to registration)

FOR MONITOR/PIEZO/RECOVERY WELLS ONLY				
SECTION	TOWNSHIP	RANGE	ELEVATION	QUAD NO.
0 0 3	0 8 S	1 2 E	0 0 3 3	1 5 8 A

7. **REMARKS:** Screen is 2" Pre-pack Stainless Steel (974'-994')
   10" Surface Casing 0 - 20'
   5" X2" packer at top of 2"SS lap at 884ft

8. **DRILLER'S LOG:**
   (Description and color of cuttings, such as shale, sand, etc. in feet below ground surface)

FROM	TO	DESCRIPTION
0	15	clay
15	25	sand
25	95	clay
95	140	sand/clay
140	520	sand/gravel
520	560	clay/sand
560	710	clay/shell
710	740	sand
740	920	clay/shell
920	994	sand

9. **FOR HEAT PUMP ONLY:** Avg. Depth: _____ft. # of Holes: _____
10. **DOES THE NEW WELL REPLACE AN EXISTING WELL?** ☐Yes ■No
    If **yes**, has owner been informed of state regulations requiring plugging of abandoned wells? ☐Yes ☐No
11. **NAME OF PERSON WHO DRILLED THE WELL:** Gary Hill

I certify that this work was done and completed in accordance with Rules and Regulations of the State of Louisiana, including Chapter XII of Title 51, Public Health – Sanitary Code, if applicable, on: 7/31/15 ***(Date)***
by: Walker-Hill Environmental, Inc ***(Name of Water Well Contractor),***
License No. WWC- 574
Authorized Signature: Gary P Hill **Date:** 8-12-15

FOR OFFICE USE ONLY

PARISH	WELL NO.	GEOLOGIC UNIT

LATITUDE	LONGITUDE	SECTION

TOWNSHIP	RANGE	ELEVATION	QUAD NO.

REGISTERED BY: _____ DATE: _____
INSPECTED BY: _____ DATE: _____
REMARKS: _____

PRINT FORM

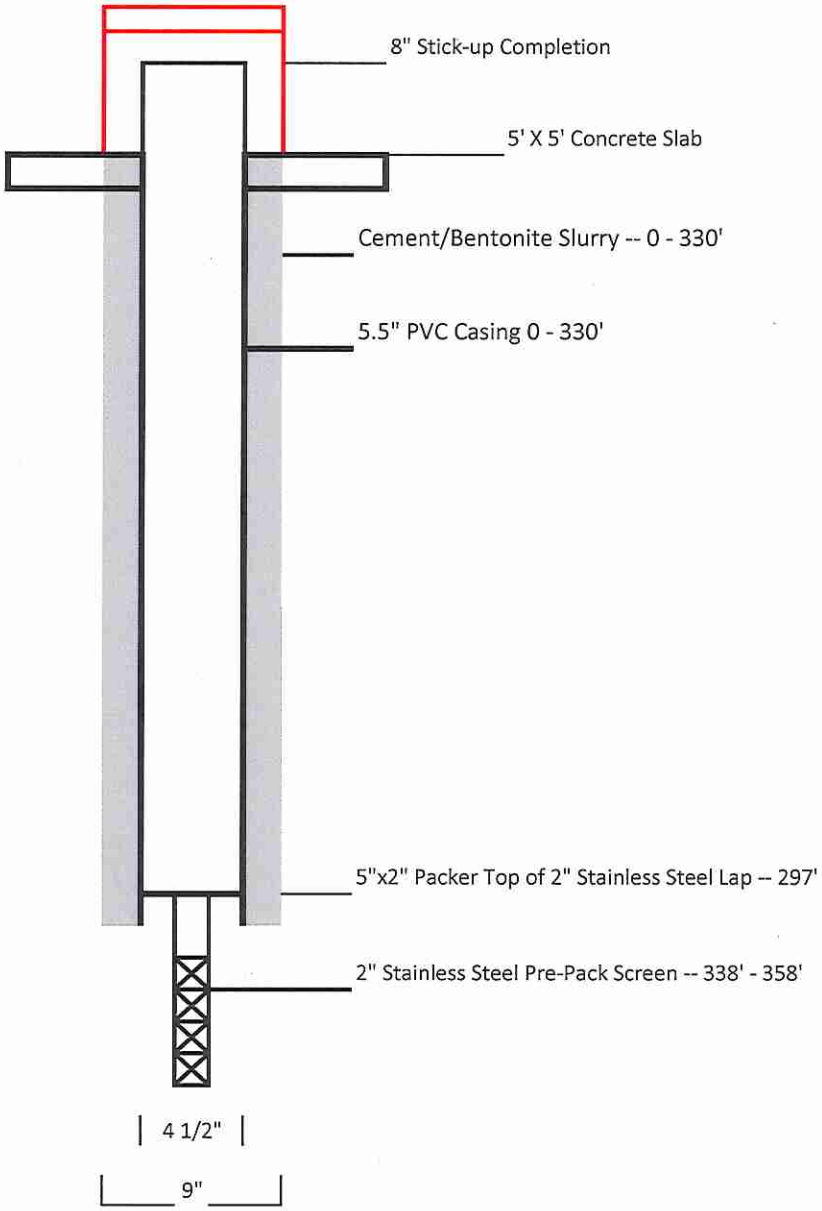

Walker-Hill Environmental, Inc.
Foxworth, MS

Typical Deep 2" Monitoring Well Construction Diagram
Helis Oil and Gas - St. Tammany, LA
Well No. - HMW-06

MAIL ORIGINAL TO:
Louisiana Dept. of Natural Resources
Attn: Ground Water Resources
P.O. Box 94275
Baton Rouge, LA 70804-9275
(225) 342-8244 Ph.
(225) 242-3505 Fax

LOUISIANA DEPARTMENT OF NATURAL RESOURCES
OFFICE OF CONSERVATION, ENVIRONMENTAL DIVISION
WATER WELL REGISTRATION SHORT FORM (DNR-GW-1S)

ONLINE ACCESS:
1) Go to http://sonris.com/
2) Click on **Data Access** in the left hand panel.
3) Under the section labeled **Conservation**, click on **Ground Water Information.**

1. **USE OF WELL** (Check appropriate box):
   ☐Domestic ☐Rig Supply ■Monitoring
   ☐Piezometer ☐Heat Pump Hole ☐Heat Pump Supply
   ☐Recovery ☐Relief ☐Abandoned Pilot Hole
   ☐Other *(please specify)*_____
2. **WELL OWNER:** Helis Oil and Gas
   Phone: (504) 523-1831
3. **WELL OWNER'S ADDRESS:** 228 St. Charles Avenue #912
   New Orleans, LA 70130
4. **OWNER'S WELL NUMBER OR NAME:** HMW-06
   Serial Number (Rig Supply Only):_____
5. **WELL INFORMATION:**
   Date completed: 8/1/15
   Depth of Hole: 360 ft. below ground surface
   Depth of Well: 358 ft.
   Static water level: 27 ft. below ground surface
   Date Measured: 8/3/15
   Casing: 5.5 in. ☐Metal ■Plastic ☐Other Length: 330 ft.
   Screen: 2 in. ■Metal ☐Plastic ☐Other Slot size: .010 in.
   Length: 20 ft. Cemented from: 330 ft. to ground surface
   Using: ■ Pump down Method ☐Gravity Method
6. **LOCATION OF WELL:**
   Latitude: 30 ° 23 ' 17 " Longitude: 89 ° 58 ' 41 "
   Parish: St. Tammany
   Physical Address: Site has no address
   Well is Near, St. Tammany Approximately 1.5 miles from
   (Crossroads, Railroad, any Landmark, etc.) S of intersection of Hwy 1
   S of intersection of Hwy 1088 & Log Cabin Rd W side of Log Cabin Rd
   (Attach a map or sketch or registered plat if Rig Supply to registration)

FOR MONITOR/PIEZO/RECOVERY WELLS ONLY

SECTION	TOWNSHIP	RANGE	ELEVATION	QUAD NO.
0 0 3	0 8 S	1 2 E	0 0 3 3	1 5 8 A

7. **REMARKS:** Screen is 2" Pre-pack Stainless Steel (338'-358')
   5" X2" packer top of 2"SS lap pipe at 297ft

8. **DRILLER'S LOG:**
   (Description and color of cuttings, such as shale, sand, etc. in feet below ground surface)

FROM	TO	DESCRIPTION
0	15	clay
15	25	sand
25	95	clay
95	140	sand/clay
140	360	sand/gravel

9. **FOR HEAT PUMP ONLY:** Avg. Depth: _____ft. # of Holes: _____
10. **DOES THE NEW WELL REPLACE AN EXISTING WELL?** ☐Yes ■No
    If **yes**, has owner been informed of state regulations requiring plugging of abandoned wells? ☐Yes ☐No
11. **NAME OF PERSON WHO DRILLED THE WELL:** Gary Hill

I certify that this work was done and completed in accordance with Rules and Regulations of the State of Louisiana, including Chapter XII of Title 51, Public Health – Sanitary Code, if applicable, on: 8/1/15 ***(Date)***
by: Walker-Hill Environmental, Inc ***(Name of Water Well Contractor),***
License No. WWC- 574
Authorized Signature: Gary P Hill **Date:** 8-12-15

FOR OFFICE USE ONLY

PARISH | WELL NO. | GEOLOGIC UNIT
LATITUDE | LONGITUDE | SECTION
TOWNSHIP | RANGE | ELEVATION | QUAD NO.

REGISTERED BY: _____ DATE: _____
INSPECTED BY: _____ DATE: _____
REMARKS: _____

PRINT FORM

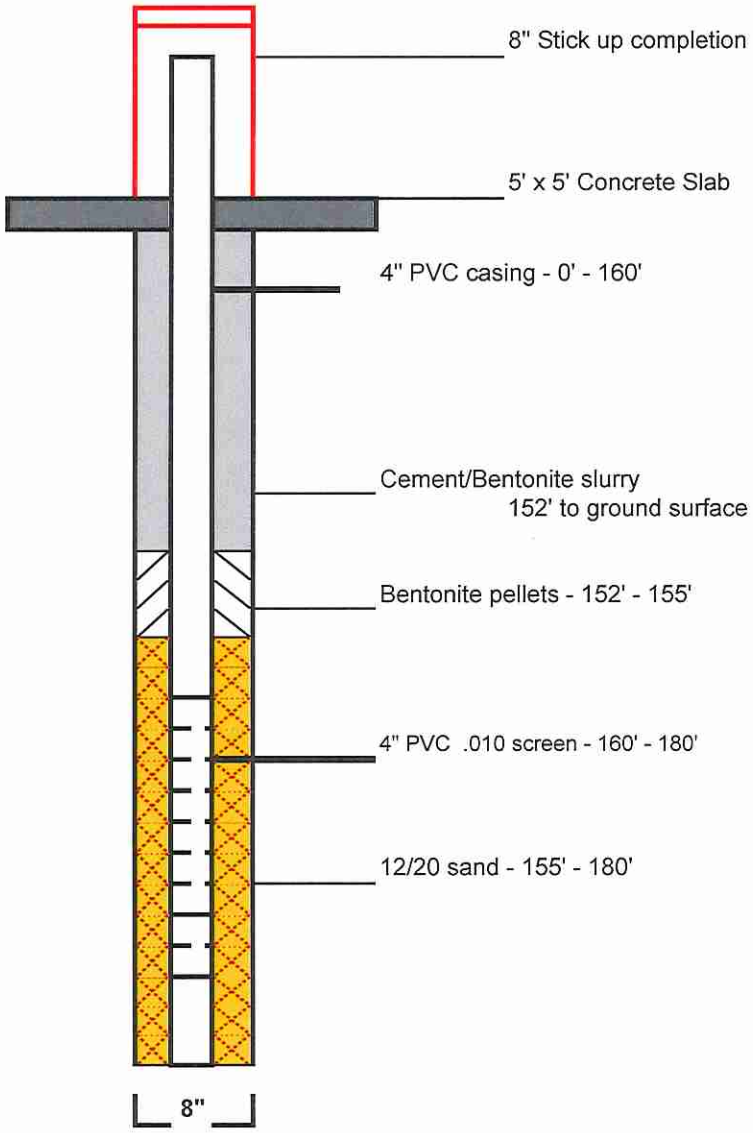

Walker-Hill Environmental, Inc.
Foxworth, MS

Typical 4" Monitoring Well Construction Diagram
Helis Oil and Gas - St Tammany, LA
Well No. - HMW-07

MAIL ORIGINAL TO:
Louisiana Dept. of Natural Resources
Attn: Ground Water Resources
P.O. Box 94275
Baton Rouge, LA 70804-9275
(225) 342-8244 Ph.
(225) 242-3505 Fax

LOUISIANA DEPARTMENT OF NATURAL RESOURCES
OFFICE OF CONSERVATION, ENVIRONMENTAL DIVISION
WATER WELL REGISTRATION SHORT FORM (DNR-GW-1S)

ONLINE ACCESS:
1) Go to http://sonris.com/
2) Click on **Data Access** in the left hand panel.
3) Under the section labeled **Conservation**, click on **Ground Water Information.**

1. **USE OF WELL** (Check appropriate box):
   ☐Domestic ☐Rig Supply ■Monitoring
   ☐Piezometer ☐Heat Pump Hole ☐Heat Pump Supply
   ☐Recovery ☐Relief ☐Abandoned Pilot Hole
   ☐Other *(please specify)*_____
2. **WELL OWNER:** Helis Oil and Gas
   Phone: (504) 523-1831
3. **WELL OWNER'S ADDRESS:** 228 St. Charles Avenue #912
   New Orleans, LA 70130
4. **OWNER'S WELL NUMBER OR NAME:** HMW-07
   Serial Number (Rig Supply Only):_____
5. **WELL INFORMATION:**
   Date completed: 7/23/15
   Depth of Hole: 180 ft. below ground surface
   Depth of Well: 180 ft.
   Static water level: 27 ft. below ground surface
   Date Measured: 7/25/15
   Casing: 4 in. ☐Metal ■Plastic ☐Other Length: 160 ft.
   Screen: 4 in. ☐Metal ■Plastic ☐Other Slot size: .010 in.
   Length: 20 ft. Cemented from: 152 ft. to ground surface
   Using: ■ Pump down Method ☐Gravity Method
6. **LOCATION OF WELL:**
   Latitude: 30 ° 23 ' 17 " Longitude: 89 ° 58 ' 41 "
   Parish: St. Tammany
   Physical Address: Site has no address
   Well is Near, St. Tammany Approximately 1.5 miles from
   (Crossroads, Railroad, any Landmark, etc.) S of intersection of Hwy 1
   S of intersection of Hwy 1088 & Log Cabin Rd W side of Log Cabin Rd
   (Attach a map or sketch or registered plat if Rig Supply to registration)

FOR MONITOR/PIEZO/RECOVERY WELLS ONLY

SECTION	TOWNSHIP	RANGE	ELEVATION	QUAD NO.
0 0 3	0 8 S	1 2 E	0 0 3 3	1 5 8 A

7. **REMARKS:**

8. **DRILLER'S LOG:**
   (Description and color of cuttings, such as shale, sand, etc. in feet below ground surface)

FROM	TO	DESCRIPTION
0	15	clay
15	25	sand
25	95	clay
95	140	sand/clay
140	180	sand/gravel

9. **FOR HEAT PUMP ONLY:** Avg. Depth: _____ft. # of Holes: _____
10. **DOES THE NEW WELL REPLACE AN EXISTING WELL?** ☐Yes ■No
    If **yes**, has owner been informed of state regulations requiring plugging of abandoned wells? ☐Yes ☐No
11. **NAME OF PERSON WHO DRILLED THE WELL:** Timmy Beach

I certify that this work was done and completed in accordance with Rules and Regulations of the State of Louisiana, including Chapter XII of Title 51, Public Health – Sanitary Code, if applicable, on: 7/23/15 ***(Date)***
by: Walker-Hill Environmental, Inc ***(Name of Water Well Contractor),***
License No. WWC- 574
Authorized Signature: Gary P Hill **Date:** 8-12-15

FOR OFFICE USE ONLY

PARISH | WELL NO. | GEOLOGIC UNIT
LATITUDE | LONGITUDE | SECTION
TOWNSHIP | RANGE | ELEVATION | QUAD NO.
REGISTERED BY: _____ DATE: _____
INSPECTED BY: _____ DATE: _____
REMARKS: _____

PRINT FORM

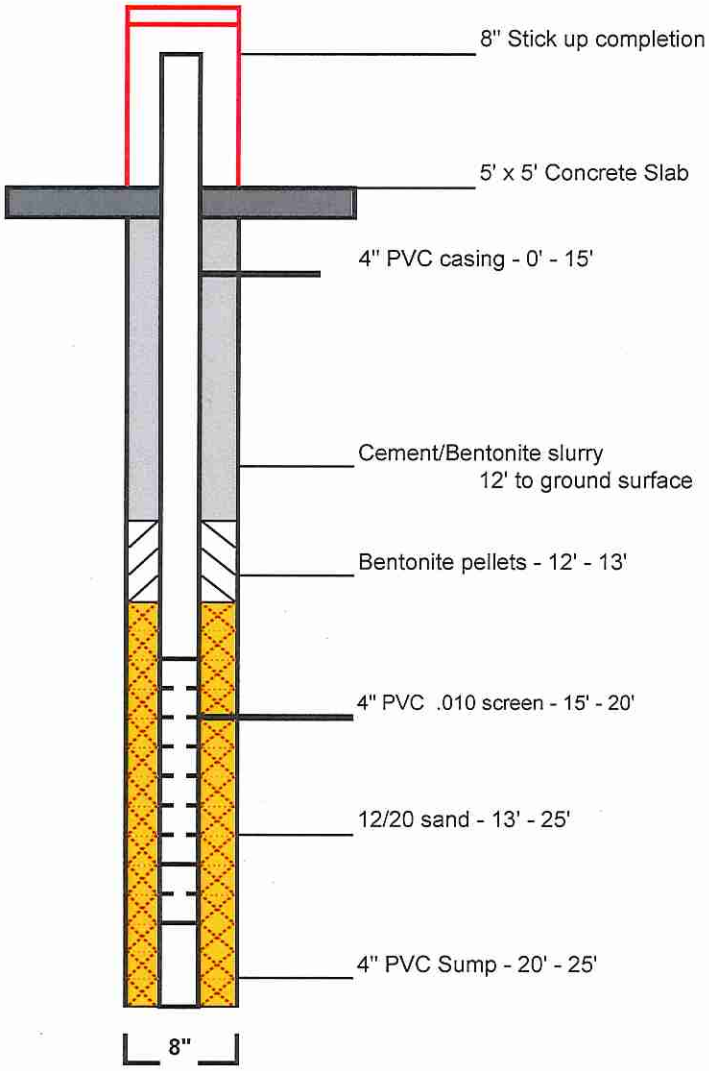

Walker-Hill Environmental, Inc.
Foxworth, MS

Typical 4" Monitoring Well Construction Diagram
Helis Oil and Gas - St. Tammany, LA
Well No. - HMW-08

MAIL ORIGINAL TO:
Louisiana Dept. of Natural Resources
Attn: Ground Water Resources
P.O. Box 94275
Baton Rouge, LA 70804-9275
(225) 342-8244 Ph.
(225) 242-3505 Fax

LOUISIANA DEPARTMENT OF NATURAL RESOURCES
OFFICE OF CONSERVATION, ENVIRONMENTAL DIVISION
WATER WELL REGISTRATION SHORT FORM (DNR-GW-1S)

ONLINE ACCESS:
1) Go to http://sonris.com/
2) Click on **Data Access** in the left hand panel.
3) Under the section labeled **Conservation**, click on **Ground Water Information.**

1. **USE OF WELL** (Check appropriate box):
   ☐Domestic ☐Rig Supply ■Monitoring
   ☐Piezometer ☐Heat Pump Hole ☐Heat Pump Supply
   ☐Recovery ☐Relief ☐Abandoned Pilot Hole
   ☐Other *(please specify)*_____
2. **WELL OWNER:** Helis Oil and Gas
   Phone: (504) 523-1831
3. **WELL OWNER'S ADDRESS:** 228 St. Charles Avenue #912
   New Orleans, LA 70130
4. **OWNER'S WELL NUMBER OR NAME:** HMW-08
   Serial Number (Rig Supply Only):_____
5. **WELL INFORMATION:**
   Date completed: 7/24/15
   Depth of Hole: 25 ft. below ground surface
   Depth of Well: 25 ft.
   Static water level: 7 ft. below ground surface
   Date Measured: 7/26/15
   Casing: 4 in. ☐Metal ■Plastic ☐Other Length: 15 ft.
   Screen: 4 in. ☐Metal ■Plastic ☐Other Slot size: .010 in.
   Length: 5 ft. Cemented from: 12 ft. to ground surface
   Using: ■ Pump down Method ☐Gravity Method
6. **LOCATION OF WELL:**
   Latitude: 30 ° 23 ' 17 " Longitude: 89 ° 58 ' 40 "
   Parish: St. Tammany
   Physical Address: Site has no address
   Well is Near, St. Tammany Approximately 1.5 miles from
   (Crossroads, Railroad, any Landmark, etc.) S of intersection of Hwy 1
   S of intersection of Hwy 1088 & Log Cabin Rd W side of Log Cabin Rd
   (Attach a map or sketch or registered plat if Rig Supply to registration)

FOR MONITOR/PIEZO/RECOVERY WELLS ONLY

SECTION	TOWNSHIP	RANGE	ELEVATION	QUAD NO.
0 0 3	0 8 S	1 2 E	0 0 3 3	1 5 8 A

7. **REMARKS:** 5' sump below well screen

8. **DRILLER'S LOG:**
   (Description and color of cuttings, such as shale, sand, etc. in feet below ground surface)

FROM	TO	DESCRIPTION
0	15	clay
15	25	sand

9. **FOR HEAT PUMP ONLY:** Avg. Depth: _____ft. # of Holes: _____
10. **DOES THE NEW WELL REPLACE AN EXISTING WELL?** ☐Yes ■No
    If **yes**, has owner been informed of state regulations requiring plugging of abandoned wells? ☐Yes ☐No
11. **NAME OF PERSON WHO DRILLED THE WELL:** Timmy Beach

I certify that this work was done and completed in accordance with Rules and Regulations of the State of Louisiana, including Chapter XII of Title 51, Public Health – Sanitary Code, if applicable, on: 7/24/15 ***(Date)***
by: Walker-Hill Environmental, Inc ***(Name of Water Well Contractor),***
License No. WWC- 574
Authorized Signature: Gary P Hill **Date:** 8-12-15

FOR OFFICE USE ONLY

PARISH | WELL NO. | GEOLOGIC UNIT
LATITUDE | LONGITUDE | SECTION
TOWNSHIP | RANGE | ELEVATION | QUAD NO.

REGISTERED BY: _____ DATE: _____
INSPECTED BY: _____ DATE: _____
REMARKS: _____

PRINT FORM

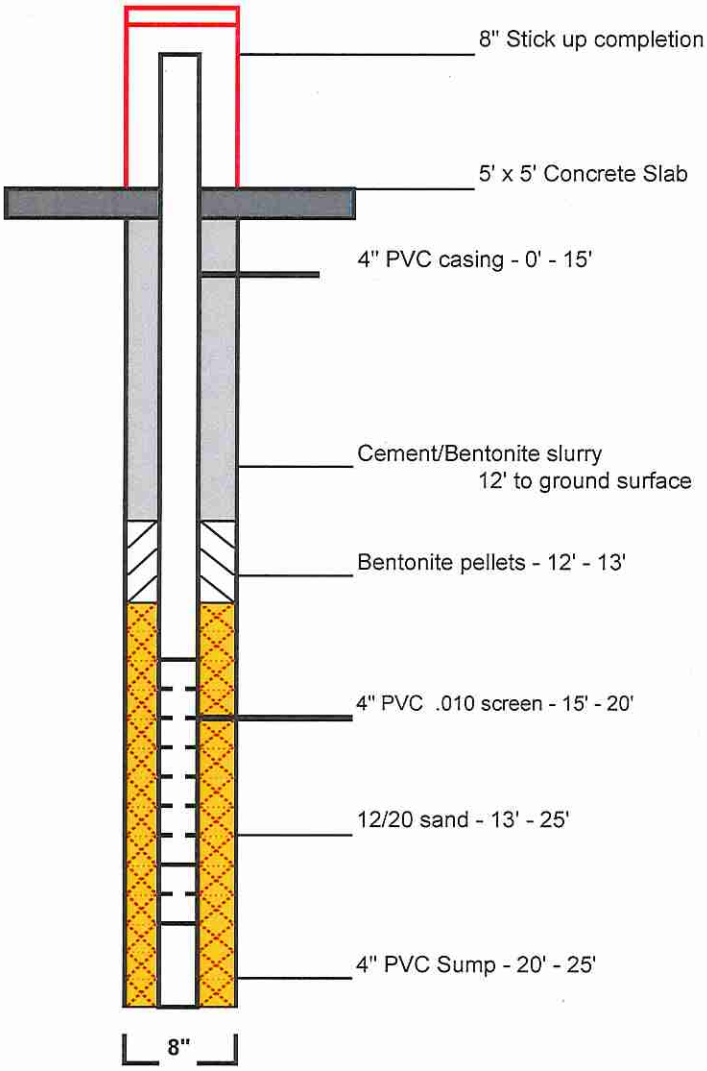

Walker-Hill Environmental, Inc.
Foxworth, MS

Typical 4" Monitoring Well Construction Diagram
Helis Oil and Gas - St. Tammany, LA
Well No. - HMW-09

MAIL ORIGINAL TO:
Louisiana Dept. of Natural Resources
Attn: Ground Water Resources
P.O. Box 94275
Baton Rouge, LA 70804-9275
(225) 342-8244 Ph.
(225) 242-3505 Fax

LOUISIANA DEPARTMENT OF NATURAL RESOURCES
OFFICE OF CONSERVATION, ENVIRONMENTAL DIVISION
WATER WELL REGISTRATION SHORT FORM (DNR-GW-1S)

ONLINE ACCESS:
1) Go to http://sonris.com/
2) Click on **Data Access** in the left hand panel.
3) Under the section labeled **Conservation**, click on **Ground Water Information.**

1. **USE OF WELL** (Check appropriate box):
   ☐Domestic ☐Rig Supply ■Monitoring
   ☐Piezometer ☐Heat Pump Hole ☐Heat Pump Supply
   ☐Recovery ☐Relief ☐Abandoned Pilot Hole
   ☐Other *(please specify)*_____
2. **WELL OWNER:** Helis Oil and Gas
   Phone: (504) 523-1831
3. **WELL OWNER'S ADDRESS:** 228 St. Charles Avenue #912
   New Orleans, LA 70130
4. **OWNER'S WELL NUMBER OR NAME:** HMW-09
   Serial Number (Rig Supply Only):_____
5. **WELL INFORMATION:**
   Date completed: 7/21/15
   Depth of Hole: 25 ft. below ground surface
   Depth of Well: 25 ft.
   Static water level: 8 ft. below ground surface
   Date Measured: 7/23/15
   Casing: 4 in. ☐Metal ■Plastic ☐Other Length: 15 ft.
   Screen: 4 in. ☐Metal ■Plastic ☐Other Slot size: .010 in.
   Length: 5 ft. Cemented from: 12 ft. to ground surface
   Using: ■ Pump down Method ☐Gravity Method
6. **LOCATION OF WELL:**
   Latitude: 30 ° 23 ' 14 " Longitude: 89 ° 58 ' 45 "
   Parish: St. Tammany
   Physical Address: Site has no address
   Well is Near, St. Tammany Approximately 1.5 miles from
   (Crossroads, Railroad, any Landmark, etc.) S of intersection of Hwy 1
   S of intersection of Hwy 1088 & Log Cabin Rd W side of Log Cabin Rd
   (Attach a map or sketch or registered plat if Rig Supply to registration)

FOR MONITOR/PIEZO/RECOVERY WELLS ONLY

SECTION	TOWNSHIP	RANGE	ELEVATION	QUAD NO.
0 0 3	0 8 S	1 2 E	0 0 3 3	1 5 8 A

7. **REMARKS:** 5' sump below well screen

8. **DRILLER'S LOG:**
   (Description and color of cuttings, such as shale, sand, etc. in feet below ground surface)

FROM	TO	DESCRIPTION
0	15	clay
15	25	sand

9. **FOR HEAT PUMP ONLY:** Avg. Depth: _____ft. # of Holes: _____
10. **DOES THE NEW WELL REPLACE AN EXISTING WELL?** ☐Yes ■No
    If **yes**, has owner been informed of state regulations requiring plugging of abandoned wells? ☐Yes ☐No
11. **NAME OF PERSON WHO DRILLED THE WELL:** Timmy Beach

I certify that this work was done and completed in accordance with Rules and Regulations of the State of Louisiana, including Chapter XII of Title 51, Public Health – Sanitary Code, if applicable, on: 7/21/15 ***(Date)***
by: Walker-Hill Environmental, Inc ***(Name of Water Well Contractor),***
License No. WWC- 574
Authorized Signature: Gary P Hill **Date:** 8-12-15

FOR OFFICE USE ONLY

PARISH | WELL NO. | GEOLOGIC UNIT
LATITUDE | LONGITUDE | SECTION
TOWNSHIP | RANGE | ELEVATION | QUAD NO.
REGISTERED BY: _____ DATE: _____
INSPECTED BY: _____ DATE: _____
REMARKS: _____

PRINT FORM

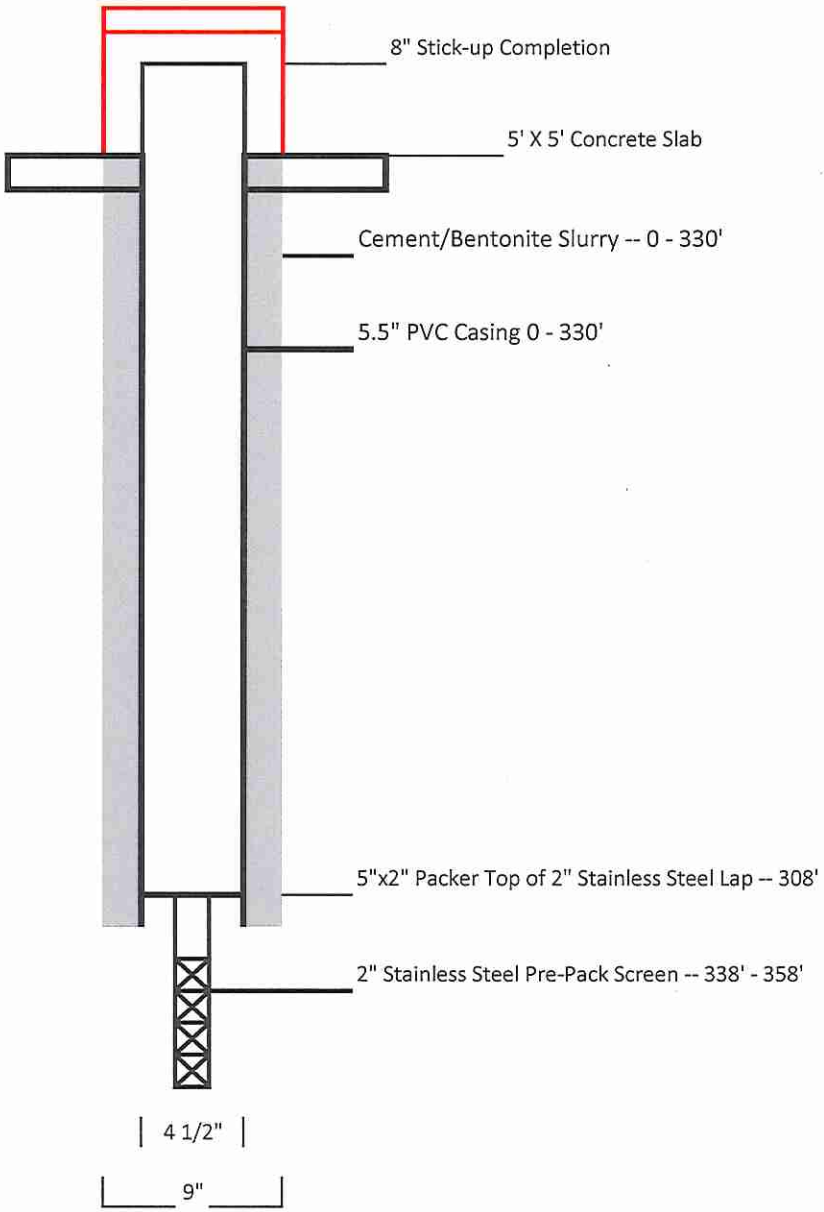

Walker-Hill Environmental, Inc.
Foxworth, MS

Typical Deep 2" Monitoring Well Construction Diagram
Helis Oil and Gas - St. Tammany, LA
Well No. - HMW-10

MAIL ORIGINAL TO:
Louisiana Dept. of Natural Resources
Attn: Ground Water Resources
P.O. Box 94275
Baton Rouge, LA 70804-9275
(225) 342-8244 Ph.
(225) 242-3505 Fax

LOUISIANA DEPARTMENT OF NATURAL RESOURCES
OFFICE OF CONSERVATION, ENVIRONMENTAL DIVISION
WATER WELL REGISTRATION SHORT FORM (DNR-GW-1S)

ONLINE ACCESS:
1) Go to http://sonris.com/
2) Click on **Data Access** in the left hand panel.
3) Under the section labeled **Conservation**, click on **Ground Water Information.**

1. **USE OF WELL** (Check appropriate box):
   ☐Domestic ☐Rig Supply ■Monitoring
   ☐Piezometer ☐Heat Pump Hole ☐Heat Pump Supply
   ☐Recovery ☐Relief ☐Abandoned Pilot Hole
   ☐Other *(please specify)*_____
2. **WELL OWNER:** Helis Oil and Gas
   Phone: (504) 523-1831
3. **WELL OWNER'S ADDRESS:** 228 St. Charles Avenue #912
   New Orleans, LA 70130
4. **OWNER'S WELL NUMBER OR NAME:** HMW-10
   Serial Number (Rig Supply Only):_____
5. **WELL INFORMATION:**
   Date completed: 7/30/15
   Depth of Hole: 360 ft. below ground surface
   Depth of Well: 358 ft.
   Static water level: 27 ft. below ground surface
   Date Measured: 8/3/15
   Casing: 5.5 in. ☐Metal ■Plastic ☐Other Length: 330 ft.
   Screen: 2 in. ■Metal ☐Plastic ☐Other Slot size: .010 in.
   Length: 20 ft. Cemented from: 330 ft. to ground surface
   Using: ■ Pump down Method ☐Gravity Method
6. **LOCATION OF WELL:**
   Latitude: 30 ° 23 ' 15 " Longitude: 89 ° 58 ' 45 "
   Parish: St. Tammany
   Physical Address: Site has no address
   Well is Near, St. Tammany Approximately 1.5 miles from
   (Crossroads, Railroad, any Landmark, etc.) S of intersection of Hwy 1
   S of intersection of Hwy 1088 & Log Cabin Rd W side of Log Cabin Rd
   (Attach a map or sketch or registered plat if Rig Supply to registration)

FOR MONITOR/PIEZO/RECOVERY WELLS ONLY

SECTION	TOWNSHIP	RANGE	ELEVATION	QUAD NO.
0 0 3	0 8 S	1 2 E	0 0 3 3	1 5 8 A

7. **REMARKS:** Screen is 2" Pre-pack Stainless Steel (338'-358')
   5" X2" packer top of 2"SS lap pipe at 308 ft

8. **DRILLER'S LOG:**
   (Description and color of cuttings, such as shale, sand, etc. in feet below ground surface)

FROM	TO	DESCRIPTION
0	15	clay
15	25	sand
25	95	clay
95	140	sand/clay
140	360	sand/gravel

9. **FOR HEAT PUMP ONLY:** Avg. Depth: _____ft. # of Holes: _____
10. **DOES THE NEW WELL REPLACE AN EXISTING WELL?** ☐Yes ■No
    If **yes**, has owner been informed of state regulations requiring plugging of abandoned wells? ☐Yes ☐No
11. **NAME OF PERSON WHO DRILLED THE WELL:** Gary Hill

I certify that this work was done and completed in accordance with Rules and Regulations of the State of Louisiana, including Chapter XII of Title 51, Public Health – Sanitary Code, if applicable, on: 7/30/15 ***(Date)***
by: Walker-Hill Environmental, Inc ***(Name of Water Well Contractor),***
License No. WWC- 574
Authorized Signature: Gary P Hill **Date:** 8-12-15

FOR OFFICE USE ONLY

PARISH | WELL NO. | GEOLOGIC UNIT
LATITUDE | LONGITUDE | SECTION
TOWNSHIP | RANGE | ELEVATION | QUAD NO.

REGISTERED BY: _____ DATE: _____
INSPECTED BY: _____ DATE: _____
REMARKS: _____

PRINT FORM

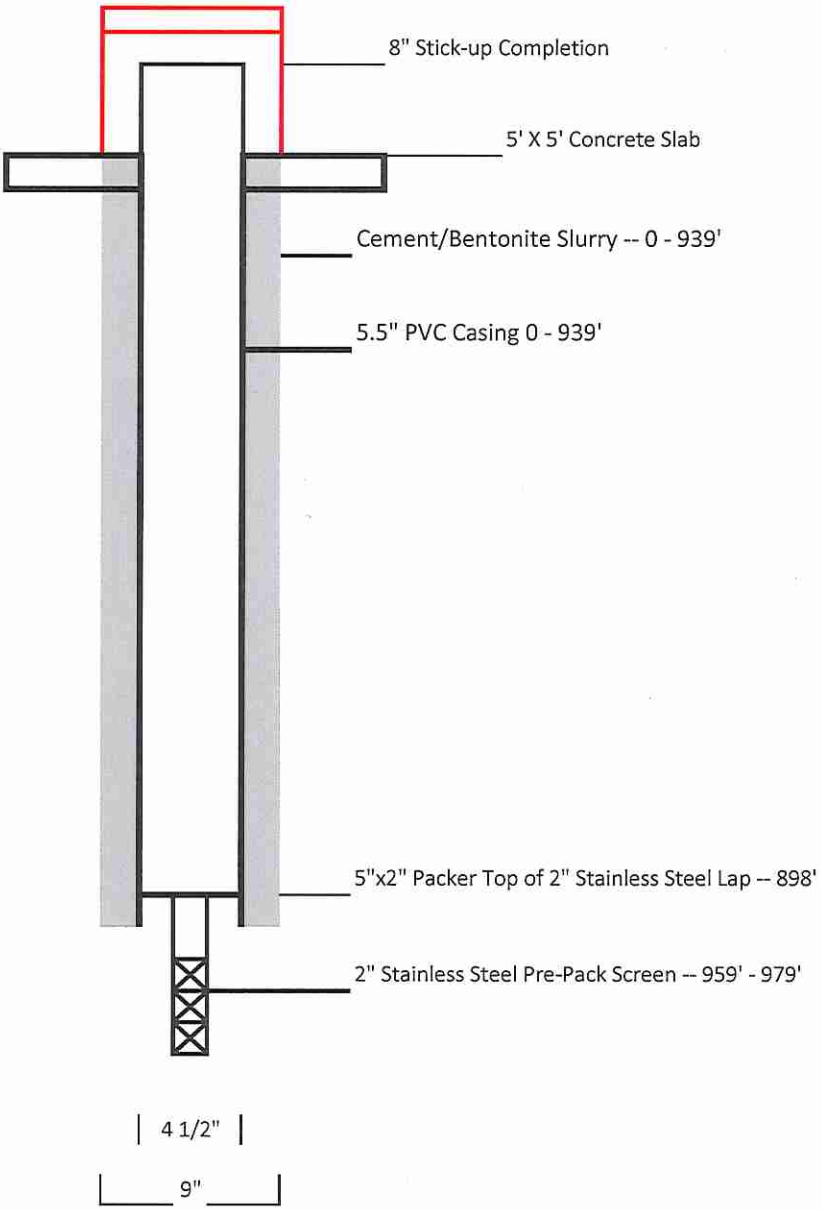

Walker-Hill Environmental, Inc.
Foxworth, MS

Typical Deep 2" Monitoring Well Construction Diagram
Helis Oil and Gas - St. Tammany, LA
Well No. - HMW-11

MAIL ORIGINAL TO:
Louisiana Dept. of Natural Resources
Attn: Ground Water Resources
P.O. Box 94275
Baton Rouge, LA 70804-9275
(225) 342-8244 Ph.
(225) 242-3505 Fax

LOUISIANA DEPARTMENT OF NATURAL RESOURCES
OFFICE OF CONSERVATION, ENVIRONMENTAL DIVISION
WATER WELL REGISTRATION SHORT FORM (DNR-GW-1S)

ONLINE ACCESS:
1) Go to http://sonris.com/
2) Click on **Data Access** in the left hand panel.
3) Under the section labeled **Conservation**, click on **Ground Water Information.**

1. **USE OF WELL** (Check appropriate box):
   ☐Domestic ☐Rig Supply ■Monitoring
   ☐Piezometer ☐Heat Pump Hole ☐Heat Pump Supply
   ☐Recovery ☐Relief ☐Abandoned Pilot Hole
   ☐Other *(please specify)*_____
2. **WELL OWNER:** Helis Oil and Gas
   Phone: (504) 523-1831
3. **WELL OWNER'S ADDRESS:** 228 St. Charles Avenue #912
   New Orleans, LA 70130
4. **OWNER'S WELL NUMBER OR NAME:** HMW-11
   Serial Number (Rig Supply Only):_____
5. **WELL INFORMATION:**
   Date completed: 8/1/15
   Depth of Hole: 980 ft. below ground surface
   Depth of Well: 980 ft.
   Static water level: 3 ft. below ground surface
   Date Measured: 8/3/15
   Casing: 5.5 in. ☐Metal ■Plastic ☐Other Length: 939 ft.
   Screen: 2 in. ■Metal ☐Plastic ☐Other Slot size: .010 in.
   Length: 20 ft. Cemented from: 939 ft. to ground surface
   Using: ■ Pump down Method ☐Gravity Method
6. **LOCATION OF WELL:**
   Latitude: 30 ° 23 ' 14 " Longitude: 89 ° 58 ' 42 "
   Parish: St. Tammany
   Physical Address: Site has no address
   Well is Near, St. Tammany Approximately 1.5 miles from
   (Crossroads, Railroad, any Landmark, etc.) S of intersection of Hwy 1
   S of intersection of Hwy 1088 & Log Cabin Rd W side of Log Cabin Rd
   (Attach a map or sketch or registered plat if Rig Supply to registration)

FOR MONITOR/PIEZO/RECOVERY WELLS ONLY

SECTION	TOWNSHIP	RANGE	ELEVATION	QUAD NO.
0 0 3	0 8 S	1 2 E	0 0 3 3	1 5 8 A

7. **REMARKS:** Screen is 2" Pre-pack Stainless Steel (959'-979')
   5" X2" packer at top of 2" SS lap pipe at 898ft

8. **DRILLER'S LOG:**
   (Description and color of cuttings, such as shale, sand, etc. in feet below ground surface)

FROM	TO	DESCRIPTION
0	15	clay
15	25	sand
25	95	clay
95	140	sand/clay
140	520	sand/gravel
520	560	clay/sand
560	710	clay/shell
710	740	sand
740	920	clay/shell
920	980	sand

9. **FOR HEAT PUMP ONLY:** Avg. Depth: _____ft. # of Holes: _____
10. **DOES THE NEW WELL REPLACE AN EXISTING WELL?** ☐Yes ■No
    If **yes**, has owner been informed of state regulations requiring plugging of abandoned wells? ☐Yes ☐No
11. **NAME OF PERSON WHO DRILLED THE WELL:** Gary Hill

I certify that this work was done and completed in accordance with Rules and Regulations of the State of Louisiana, including Chapter XII of Title 51, Public Health – Sanitary Code, if applicable, on: 8/1/15 ***(Date)***
by: Walker-Hill Environmental, Inc ***(Name of Water Well Contractor),***
License No. WWC- 574
Authorized Signature: Gary P Hill **Date:** 8-12-15

FOR OFFICE USE ONLY

PARISH | WELL NO. | GEOLOGIC UNIT
LATITUDE | LONGITUDE | SECTION
TOWNSHIP | RANGE | ELEVATION | QUAD NO.

REGISTERED BY: _____ DATE: _____
INSPECTED BY: _____ DATE: _____
REMARKS: _____

PRINT FORM

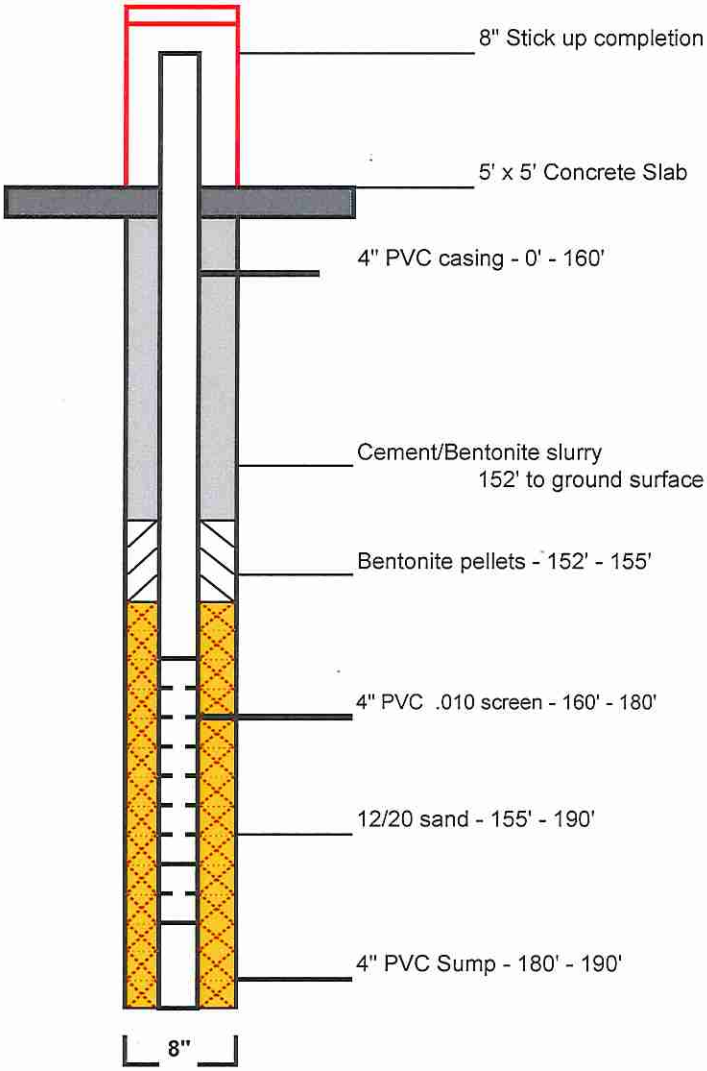

Walker-Hill Environmental, Inc.
Foxworth, MS

Typical 4" Monitoring Well Construction Diagram
Helis Oil and Gas - Mandeville, LA
Well No. - HMW-03

MAIL ORIGINAL TO:
Louisiana Dept. of Natural Resources
Attn: Ground Water Resources
P.O. Box 94275
Baton Rouge, LA 70804-9275
(225) 342-8244 Ph.
(225) 242-3505 Fax

LOUISIANA DEPARTMENT OF NATURAL RESOURCES
OFFICE OF CONSERVATION, ENVIRONMENTAL DIVISION
WATER WELL REGISTRATION SHORT FORM (DNR-GW-1S)

ONLINE ACCESS:
1) Go to http://sonris.com/
2) Click on **Data Access** in the left hand panel.
3) Under the section labeled **Conservation**, click on **Ground Water Information.**

1. **USE OF WELL** (Check appropriate box):
   ☐ Domestic ☐ Rig Supply ■ Monitoring
   ☐ Piezometer ☐ Heat Pump Hole ☐ Heat Pump Supply
   ☐ Recovery ☐ Relief ☐ Abandoned Pilot Hole
   ☐ Other *(please specify)*_____
2. **WELL OWNER:** Helis Oil and Gas
   Phone: (504) 523-1831
3. **WELL OWNER'S ADDRESS:** 228 St. Charles Avenue #912
   New Orleans, LA 70130
4. **OWNER'S WELL NUMBER OR NAME:** HMW-12
   Serial Number (Rig Supply Only):_____
5. **WELL INFORMATION:**
   Date completed: 7/22/15
   Depth of Hole: 220 ft. below ground surface
   Depth of Well: 190 ft.
   Static water level: 27 ft. below ground surface
   Date Measured: 7/24/15
   Casing: 4 in. ☐ Metal ■ Plastic ☐ Other Length: 160 ft.
   Screen: 4 in. ☐ Metal ■ Plastic ☐ Other Slot size: .010 in.
   Length: 20 ft. Cemented from: 152 ft. to ground surface
   Using: ■ Pump down Method ☐ Gravity Method
6. **LOCATION OF WELL:**
   Latitude: 30 ° 23 ' 15 " Longitude: 89 ° 58 ' 45 "
   Parish: St. Tammany
   Physical Address: Site has no address
   Well is Near, St. Tammany Approximately 1.5 miles from
   (Crossroads, Railroad, any Landmark, etc.) S of intersection of Hwy 1
   S of intersection of Hwy 1088 & Log Cabin Rd W side of Log Cabin Rd
   (Attach a map or sketch or registered plat if Rig Supply to registration)

FOR MONITOR/PIEZO/RECOVERY WELLS ONLY				
SECTION	TOWNSHIP	RANGE	ELEVATION	QUAD NO.
003	08S	12E	0033	158A

7. **REMARKS:** 4" PVC Well screen (160' - 180')
   4" PVC 10' Sump below well screen

8. **DRILLER'S LOG:**
   (Description and color of cuttings, such as shale, sand, etc. in feet below ground surface)

FROM	TO	DESCRIPTION
0	15	clay
15	25	sand
25	95	clay
95	140	sand/clay
140	220	sand/gravel

9. **FOR HEAT PUMP ONLY:** Avg. Depth: _____ft. # of Holes: _____
10. **DOES THE NEW WELL REPLACE AN EXISTING WELL?** ☐ Yes ■ No
    If **yes**, has owner been informed of state regulations requiring plugging of abandoned wells? ☐ Yes ☐ No
11. **NAME OF PERSON WHO DRILLED THE WELL:** Timmy Beach

I certify that this work was done and completed in accordance with Rules and Regulations of the State of Louisiana, including Chapter XII of Title 51, Public Health – Sanitary Code, if applicable, on: 7/22/15 ***(Date)***
by: Walker-Hill Environmental, Inc ***(Name of Water Well Contractor),***
License No. WWC- 574
Authorized Signature: Gary P Hill **Date:** 8-12-15

FOR OFFICE USE ONLY

PARISH	WELL NO.	GEOLOGIC UNIT

LATITUDE	LONGITUDE	SECTION

TOWNSHIP	RANGE	ELEVATION	QUAD NO.

REGISTERED BY: _____ DATE: _____
INSPECTED BY: _____ DATE: _____
REMARKS: _____

PRINT FORM