19345 Point O Woods Court
Baton Rouge, Louisiana 70809
225-753-4723
225-753-4661 (fax)

Energy Research Services, Inc.

February 17, 2004

Commissioner James H. Welsh
Office of Conservation
PO Box 94275
Baton Rouge, LA 70804-9275
Attention: Mr. Tod Keating

Re: Request for Commingling Authority
Hilcorp Energy Company
Bastian Bay Consolidated Commingling Facility (Code No. 91140)
Bastian Bay Field
Plaquemines Parish, Louisiana

Dear Commissioner Welsh,

On behalf of Hilcorp Energy Company (Hilcorp), application is being made, pursuant to Statewide Order 29-D-1, for the calling of a public hearing, after legal notice, to consider evidence relative to the issuance of an order approving the commingling in the Bastian Bay Consolidated Commingling Facility gas and/or liquid hydrocarbons produced from the following units:

RS RA SUA	Order 339-HHHH
7500 RD SUA	Order 339-OO-5
S-3 RF SUA	Order 339-DD-9

The method of measurement and allocation of production which Hilcorp Energy Company is proposing is explained in the attached description of operations and schematic flow diagram for the Bastian Bay Consolidated Commingling Facility. As indicated, the production will be allocated by monthly well test, using methods other than gauge tanks. The subject facilities are located in the Bastian Bay Field, Plaquemines Parish, Louisiana. The methods of measurement and allocation previously approved at the facility will remain the same.

Attached are copies of the following:

- Schematic flow diagrams
- Description of operations
- List of interested owners, interested parties, and represented parties
- Hearing fee of $755.00

The applicable authority will be covered pursuant to Title 43, Part XIX.Subpart 6, Statewide Order No. 29-D-1. 1505.2 (Well Test). The allocation meters will be tested and proven monthly for liquid hydrocarbon meters and quarterly for gaseous hydrocarbon meters.

In Hilcorp's opinion, this authorization will promote conservation of the natural resources within the State of Louisiana, will prevent waste, will protect the rights of all parties at interest and will result in substantial economic savings without results that may be in any way inconsistent with conservation policies, statutes or regulations of the State of Louisiana. Further, in the opinion of the applicant, the commingling procedure proposed will provide reasonable, accurate measurement, will not create inequities and will insure that the owner of any interest will have the opportunity to recover his just and equitable share of the reservoir content. Hilcorp requests that this matter be set for hearing at the earliest possible time and date.

A copy of this application and attachments, except the check, is being sent to Mr. Richard D. Hudson, District Manager, Office of Conservation, Lafayette, Louisiana. A copy of the legal notice will be mailed to each Interested Owner, Represented Parties, and Interested Parties having an interest in the various leases and units.

Hilcorp also requests emergency commingling authority for 90 days.

All inquiries concerning this proposal should be directed to Mr. John T. Connolly, Agent for Hilcorp Energy Company, 19345 Point O Wood Court, Baton Rouge, Louisiana 70809.

Should you have any questions, please call or email me at 753-4723 / ersses@cox.net.

Very truly yours,

John T. Connolly
Agent for Hilcorp Energy Company

Cc: Ms. Leslie Avioli
Mr. Michael Schoch
Hilcorp Energy Company

Mr. Richard Hudson
District Manager
Office of Conservation
825 Kaliste Saloom Road
Brandywine III, Suite 220
Lafayette, Louisiana 70508

CONSOLIDATED COMMINGLING OF ALL PRODUCTION FROM THE FOLLOWING UNITS AND LEASES IN BASTIAN BAY FIELD AND BASTIAN BAY SE FIELD:

UNIT/LEASE NAME	EFFECTIVE DATE	ORDER/ RECORDING REFERENCE
SL 192 7PP	02/28/28	65/398
FASTERLING AND J.B. FASTERLING	05/27/37	84/406
LL&E AND LL&E FEE	11/22/40	102/137
SL 3155	02/28/57	196/874
J.S. ABERCROMBIE	07/01/53	173/746
VUE	02/14/92	JUDGMENT
SE R RC SUA	01/10/95	339-A-5
SE S RA SUC	09/01/71	339-O-5
SE S RA SUB	09/01/71	339-O-5
SE S RA SUA	09/01/71	339-O-5
SE S RA SUD	09/01/71	339-O-5
SE S RB SUA	09/01/71	339-O-5
S-3 RC SUA	03/01/68	339-DD-2
S3-RB SUA	07/01/75	339-DD-4
SE S-3 RA SUA	04/22/80	339-DD-5
SE S-3 RB SUA	04/22/80	339-DD-5
SE S3 RA SUB	04/22/80	339-DD-5
LI RA SUA	11/01/62	339-CE
8600 RA SUA	12/01/64	339-FF
DISC 12 SUA	03/06/67	339-G-1
7200 RA SUA	03/01/68	339-GG
8900 RB SUA	05/01/58	339-H-1
SUA	09/15/93	339-K-2
SUC	09/15/93	339-K-2
K RD SUD	09/15/93	339-K-2
7800 RB SUA	04/01/71	339-KK-1
7800' SUA	03/01/72	339-KK-2
O-3 RC SUB	07/01/75	339-L-1
6200 RA SUA	03/01/58	339-M
SE H RB SUA	09/01/71	339-H-4
SE H RB SUC	09/01/71	339-H-4
SE H RB SUD	09/01/71	339-H-4
SE H RB SUA	09/01/71	339-H-4
SE H RB SUC	09/01/71	339-H-4
H RD SUA	07/01/75	339-H-4
SE H RB SUB	09/01/71	339-H-4
9200' "A" SUA	04/01/89	339-NN
SE O RA SUA	06/29/94	339-O-8
SE O RA SUC	12/13/94	339-O-8
SE O RA SUA	09/01/71	339-O-8
SE O RA SUJ	09/01/71	339-O-8
SE O RA SUD	09/01/71	339-O-8
SE O RA SUC	09/01/71	339-O-8
7500' SUA	07/12/71	339-OO
SE O RA SUB	09/01/71	339-P-3
SE P RA SUA	09/01/71	339-P-3

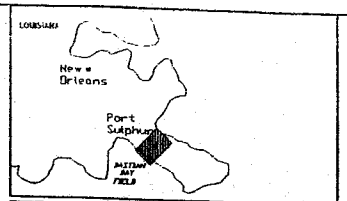

UNIT/LEASE NAME	EFFECTIVE DATE	ORDER/ RECORDING REFERENCE
SE P RB SUA	09/01/71	339-P-3
8200' SUA	04/01/71	339-PP
6600' RA SUA	02/02/85	339-OO-4
9250 RB SUA	07/18/85	339-R-1
5700' SUA	03/01/72	339-RR
UI RA SUA	08/06/73	339-SS
9200 RB SUA	04/25/85	339-U-5
9200 SUB	11/01/62	339-U-2
9200 SUC	11/01/62	339-U-2
9200 SUD	11/01/62	339-U-2
9200 RA SUA	06/01/77	339-U-3
SE L RA SUA	09/01/71	339-W-2
SE R RA SUC	09/01/71	339-Y-1
SE R RA SUA	09/01/71	339-Y-1
SE R RA SUB	09/01/71	339-Y-1
SE R RB SUA	09/01/71	339-Y-1
K RD SUB	09/15/93	339-K-2
SL 3279	09/20/57	201/760
SL 3212 &	06/26/57	199/1021
7000 RC SUA	03/28/96	339-HH-2
8700 RB SUA	03/14/96	339-Z-1
J RC SUA	04/28/97	339-J-5
UI RB SUA	09/07/73	339-SS-1
LL&E B	05/31/56	191/948
DISC 12 RB SUA	09/07/73	339-G-2
F RA SUA	08/07/73	339-UU
F-2 RA SUA	09/07/73	339-VV
8200 RA SUA	07/14/98	339-PP-1
8275 RA SUA	07/14/98	339-AAAA
6200 RA SUA	08/15/98	339-M-4
5700 RC SUA	09/15/98	339-RR-2
8250 RA SUA	11/18/98	339-CCCC
7000' SUA	03/01/66	339-HH
7200' SUB	05/01/66	339-JJ
7800' SUA	05/01/66	339-KK
8700' SU	03/01/61	339-Z
8900' SU	01/01/58	339-H

RS RA SUA Order 339-HHHH
7500 RD SUA Order 339-OO-5
S-3 RF SUA Order 339-DD-9

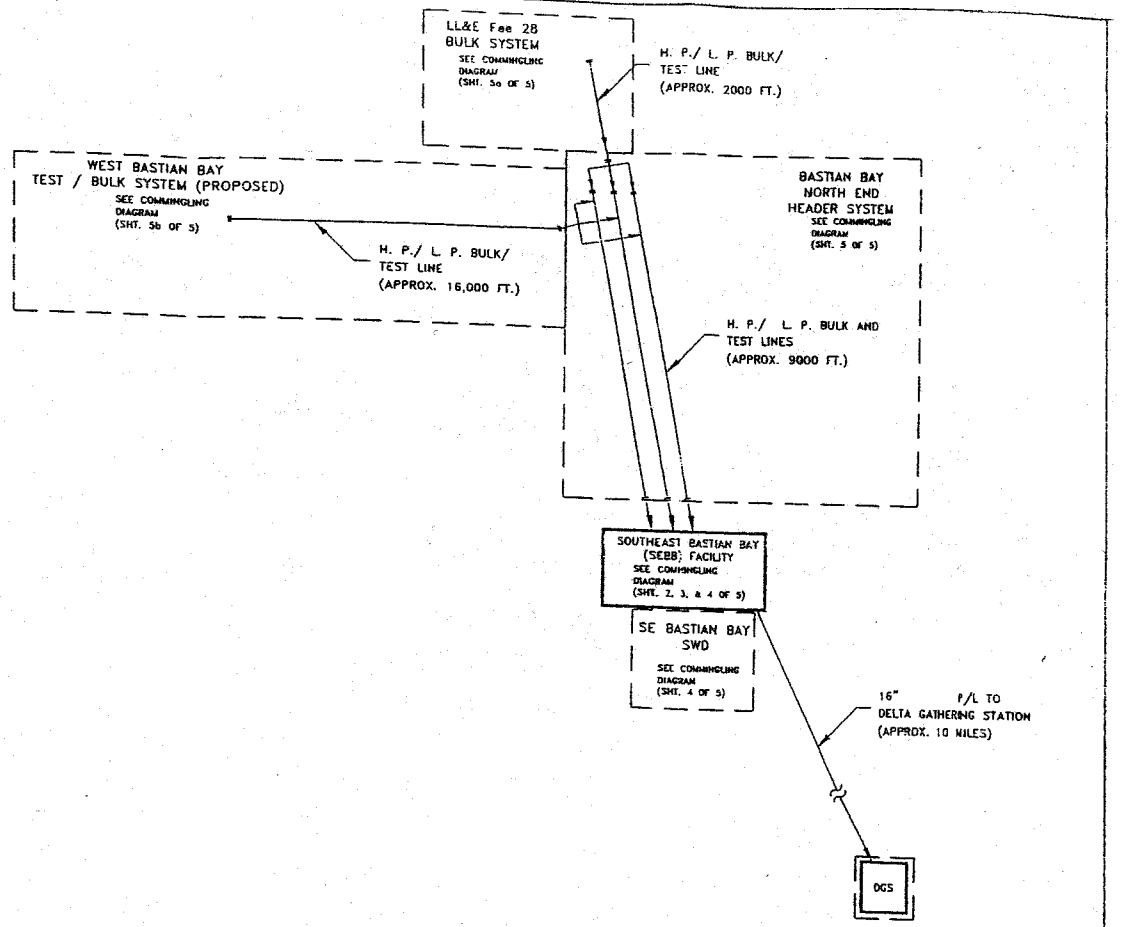

NO	REVISION	BY	DATE CHK'D	APP'D
14	ADDED SE BASTIAN BAY SWD AND UPDATED DIAGRAM TO REFLECT PROPER NAMES	F.SAM	01/26/99	
		T.C.RC	01/26/99	
13	ADDED DIAGRAM OF NEW LL&E Fee 28 BULK SYSTEM and WEST BASTIAN BAY TEST / BULK SYSTEM	F.SAM	01/22/99	
		T.C.RC	01/22/99	
12	ADDED 7000' SUA, 7200' SUB, 7800' SUA, 8700' SU, 8900' SU	F.SAM	10/28/98	
		T.E.R	10/28/98	
11	ADDED 8250 RA SUA	F.SAM	10/20/98	
		T.E.R	10/20/98	
10	ADDED 6200 RA SUA & 5700 RC SUA	F.SAM	09/15/98	
		T.E.R	09/15/98	
9	ADDED 8200 RA SUA & 8275 RA SUA	F.SAM	07/14/98	
		T.E.R	07/14/98	
8	ADDED J RC SUA, UI RB SUA, LL&E B, DISC 12 RB SUA, F RA SUA, F-2 RA SUA.	F.SAM	01/30/98	
		T.E.R.	01/30/98	
7	ADDED 7000 RC SUA & 8700 RB SUA	F.SAM	05/28/96	
		T.E.R	05/28/96	
6	ADDED SL 3279 & SL 3212	F.SAM	10/23/95	
		SPT	10/23/95	
5	ADDED 9200 AE SUA, CREATED BY 339-U-1	F.SAM	10/23/95	
		SPT	10/23/95	
4	DELETED 9200 SD (339-U & U-1) UNITS DISSOLVED BY 339-U-2	F.SAM	10/23/95	
		SPT	10/23/95	
3	ADDED 9250 RB SUA, CREATED BY 339-R-1	F.SAM	10/23/95	
		SPT	10/23/95	
2	DELETE 9250 SD: 339-R UNIT DISSOLVED BY 339-R-1	F.SAM	10/23/95	
		SPT	10/23/95	
1	ADDED K RD SUB, 339-K-2	F.SAM	10/23/95	
		SPT	10/23/95	

Hilcorp Energy Company

BASTIAN BAY FIELD and SOUTHEAST BASTIAN BAY (SEBB) FIELD
COMMINGLING DIAGRAM
BASTIAN BAY CONSOLIDATED COMMINGLING FACILITY
(NUMBER 91140)

CHECKED BY | DRAWN BY
APPROVED BY | SHT.: 4 OF 5

Exhibit 1

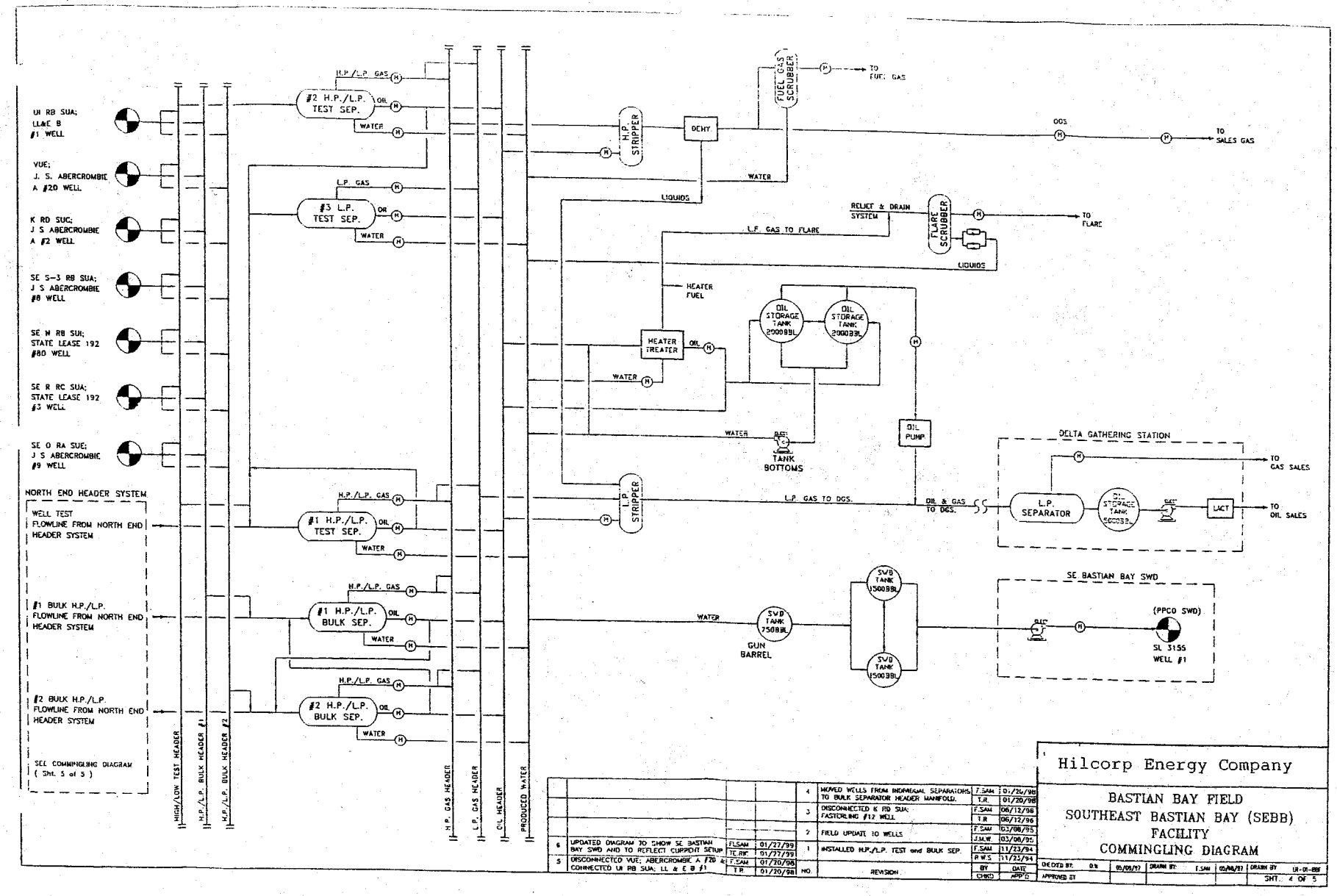
UI RB SUA; LL&E B #1 WELL
VUE; J. S. ABERCROMBIE A #20 WELL
K RD SUC; J S ABERCROMBIE A #2 WELL
SE S-3 RB SUA; J S ABERCROMBIE #8 WELL
SE N RB SUI; STATE LEASE 192 #80 WELL
SE R RC SUA; STATE LEASE 192 #3 WELL
SE O RA SUE; J S ABERCROMBIE #9 WELL
NORTH END HEADER SYSTEM
WELL TEST FLOWLINE FROM NORTH END HEADER SYSTEM
#1 BULK H.P./L.P. FLOWLINE FROM NORTH END HEADER SYSTEM
#2 BULK H.P./L.P. FLOWLINE FROM NORTH END HEADER SYSTEM
SEE COMMINGLING DIAGRAM (Sht. 5 of 5)
HIGH/LOW TEST HEADER
H.P./L.P. BULK HEADER #1
H.P./L.P. BULK HEADER #2
H.P./L.P. GAS
#2 H.P./L.P. TEST SEP.
OIL
WATER
L.P. GAS
#3 L.P. TEST SEP.
#1 H.P./L.P. TEST SEP.
#1 H.P./L.P. BULK SEP.
#2 H.P./L.P. BULK SEP.
H.P. GAS HEADER
L.P. GAS HEADER
OIL HEADER
PRODUCED WATER
H.P. STRIPPER
DEHY.
FUEL GAS SCRUBBER
TO FUEL GAS
OGS
TO SALES GAS
LIQUIDS
RELIEF & DRAIN SYSTEM
FLARE SCRUBBER
TO FLARE
L.P. GAS TO FLARE
HEATER FUEL
HEATER TREATER
OIL STORAGE TANK 2000BBL
OIL PUMP
TANK BOTTOMS
L.P. STRIPPER
L.P. GAS TO DGS.
OIL & GAS TO DGS.
DELTA GATHERING STATION
L.P. SEPARATOR
OIL STORAGE TANK 5000BBL
LACT
TO GAS SALES
TO OIL SALES
SE BASTIAN BAY SWD
SWD TANK 750BBL
GUN BARREL
SWD TANK 1500BBL
(PPCO SWD)
SL 3155 WELL #1
Hilcorp Energy Company
BASTIAN BAY FIELD
SOUTHEAST BASTIAN BAY (SEBB)
FACILITY
COMMINGLING DIAGRAM
SHT. 4 OF 5
6 UPDATED DIAGRAM TO SHOW SE BASTIAN BAY SWD AND TO REFLECT CURRENT SETUP FLSAM 01/27/99 TE.RIC 01/27/99
5 DISCONNECTED VUE; ABERCROMBIE A #20 & CONNECTED UI RB SUA; LL & E B #1 F.SAM 01/20/98 T.R. 01/20/98
4 MOVED WELLS FROM INDIVIDUAL SEPARATORS TO BULK SEPARATOR HEADER MANIFOLD. F.SAM 01/20/98 T.R. 01/20/98
3 DISCONNECTED K RD SUA; FASTERLING #12 WELL F.SAM 06/12/96 T.R. 06/12/96
2 FIELD UPDATE TO WELLS F.SAM 03/08/95 J.M.W. 03/08/95
1 INSTALLED H.P./L.P. TEST and BULK SEP. F.SAM 11/23/94 R.W.S. 11/23/94
NO. REVISION BY CHKD DATE APP'D
CHECKED BY: DR 05/09/97 DRAWN BY: F.SAM 05/08/97 DRAWN BY UI-01-BBF
APPROVED BY

Exhibit 2

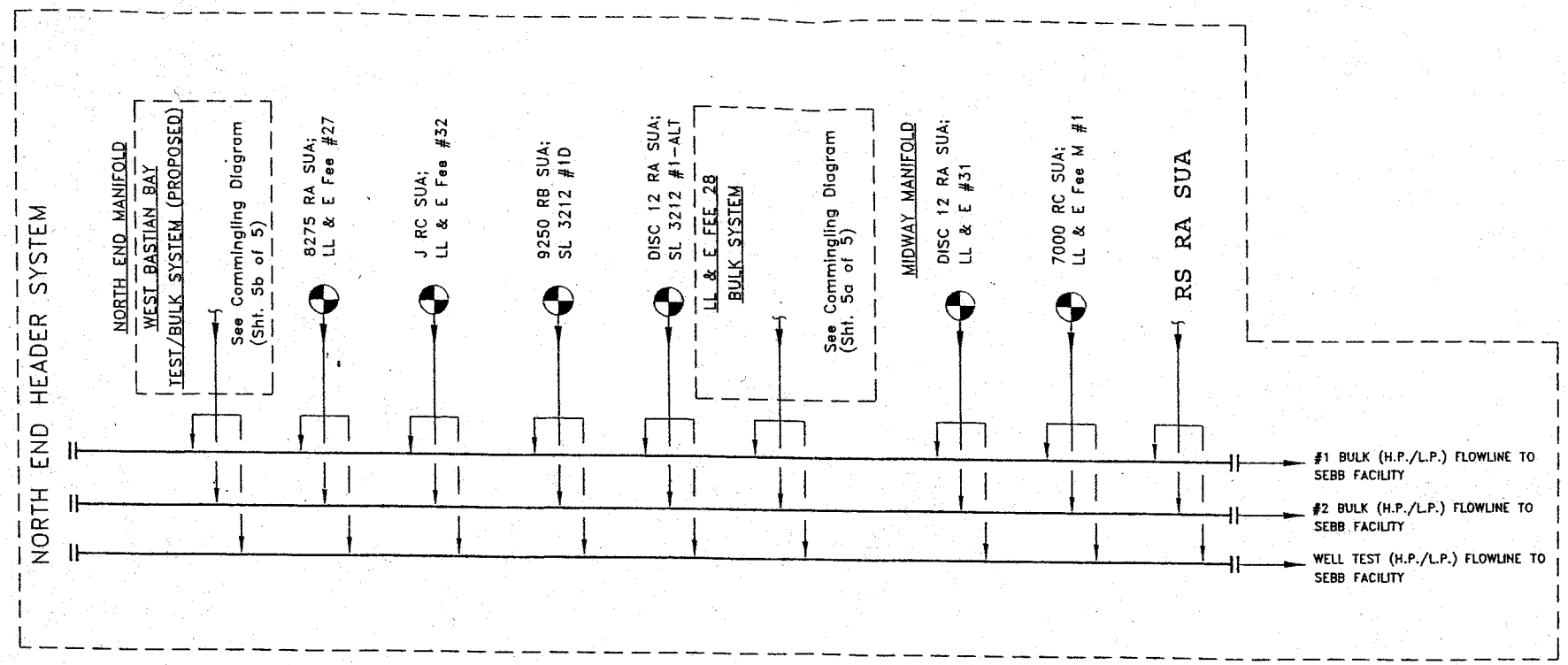

NO.	REVISION	BY	DATE
16	UPDATED DIAGRAM TO REFLECT WELL SYMBOLS AND PROPER FLOWLINE NAMES.	FLSAM / TE.RC	01/27/98 / 01/27/98
15	CHANGE UI RA SUA; LL & E #26 TO DISC 12 RA SUA; LL & E #31	FLSAM / TE.RC	01/05/98 / 01/05/98
14	CHANGE WELL - 6600 RA SUA; LL & E Fee #26 TO NEW LL & E Fee #28 BULK SYSTEM	F.SAM / T.E.R.	08/15/98 / 08/15/98
13	CHANGED WELL - LI RA SUA; LL & E Fee #31 TO UI RA SUA; LL & E #31	F.SAM / T.E.R.	07/28/98 / 07/28/98
12	CHANGE WELL - DISC 12 RA SUA; LL & E Fee #27 TO NEW WEST BASTIAN BAY TEST / BULK SYSTEM	F.SAM / T.E.R.	06/12/98 / 06/12/98
11	CHANGE WELL - LL & E Fee #27 TO 8275 RA SUA; LL & E Fee #27	F.SAM / T.E.R.	07/14/98 / 07/14/98
10	CHANGE WELL - 6700 RB SUA; LL& E Fee #270 TO LL & E Fee #27	F.SAM / T.R.	06/18/98 / 06/18/98
9	DISCONNECTED 9200 RC SUA; SL 3275 #1D AND CONNECTED 7000 RC SUA; LL & E Fee M #1	F.SAM / T.R.	01/23/98 / 01/23/98
8	ADDED J RC SUA, LL & E Fee #32.	F.SAM / T.R.	01/20/98 / 01/20/98
7	CHANGED DISC 12 RA SUA; 3212 #1 TO 1-ALT	F.SAM / T.E.R.	06/16/98 / 06/16/98
6	REMOVED SL 3212 #7 TO LL & E Fee #27	F.SAM / T.E.R.	06/12/98 / 06/12/98
5	CHANGE WELL - LL & E Fee #270 TO 6700 RB SUA, LL & E Fee #270	F.SAM / T.E.R.	05/20/98 / 05/20/98
5	CHANGE WELL - LL & E Fee #270 TO 6700 RB SUA; LL & E Fee #270	F.SAM / T.E.R.	05/20/98 / 05/20/98
4	CHANGE WELL - U I RA SUA; LL & E #27 TO LL & E Fee #270; & ADDED DISC 12 RA SUA; SL 3212 #2	F.SAM / T.E.R.	04/15/98 / 04/15/98
3	ADDED WELLS-9200 RC SUA; SL 3275 #1-D, 9250 RB SUA; SL 3212 #1-D AND DISC 12 RA SUA; SL 3212 #1	F.SAM / S.P.T.	10/23/95 / 10/23/95
2	ADDED WELL- K RD SUA; LL & E #31	F.SAM / S.P.T.	10/23/95 / 10/23/95
1	CHANGED WELL- L I RA SUA; LL & E #27 TO U I RA SUA; LL & E #27	F.SAM / S.P.T.	07/12/95 / 07/12/95

Hilcorp Energy Company

BASTIAN BAY FIELD
BASTIAN BAY NORTH END
HEADER SYSTEM
COMMINGLING DIAGRAM

CHECKED BY: | DRAWN BY: | DRAWING NO.
APPROVED BY: | SHT.: 5 OF

Exhibit 3

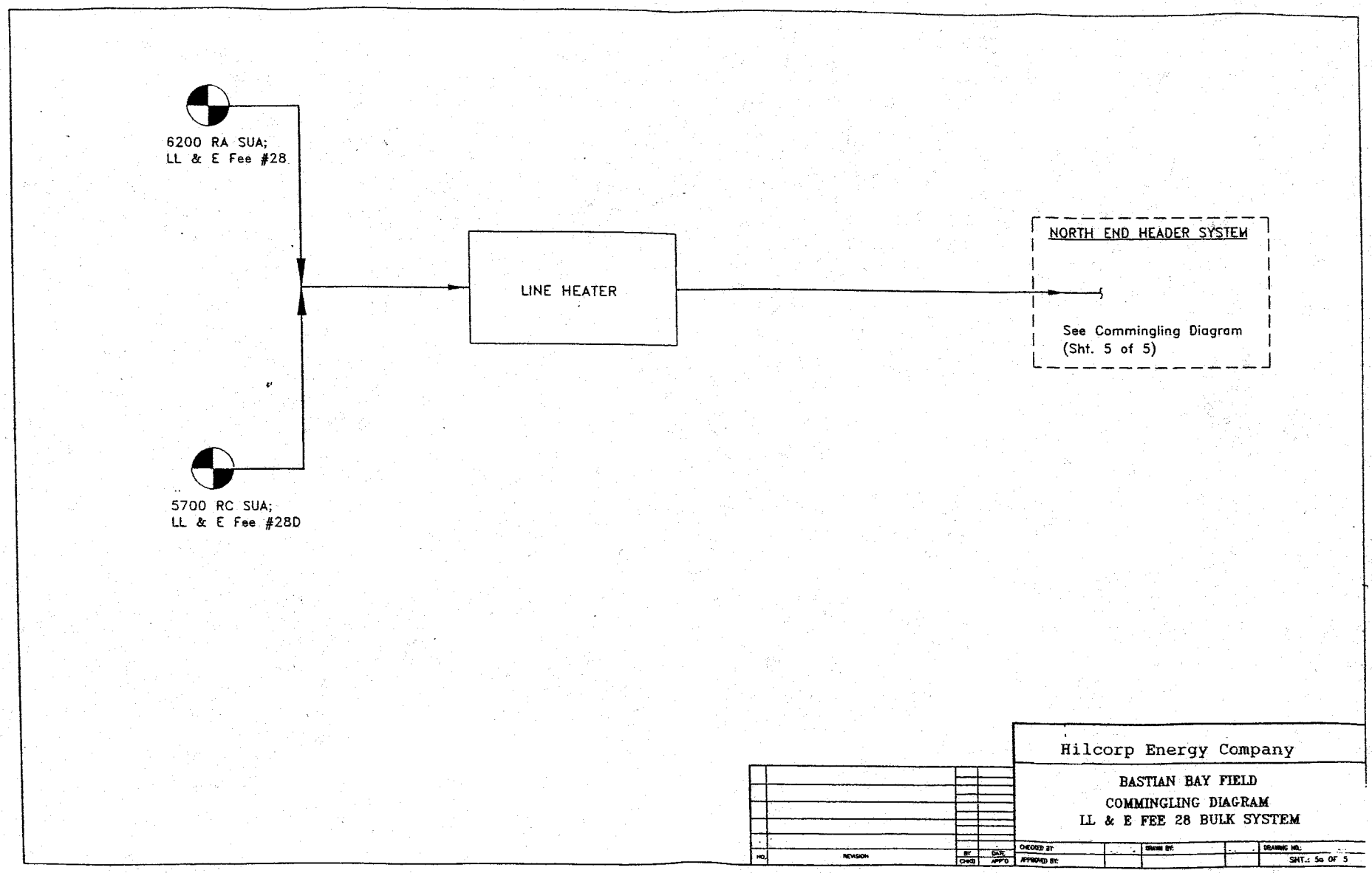
6200 RA SUA;
LL & E Fee #28
5700 RC SUA;
LL & E Fee #28D
LINE HEATER
NORTH END HEADER SYSTEM
See Commingling Diagram
(Sht. 5 of 5)
Hilcorp Energy Company
BASTIAN BAY FIELD
COMMINGLING DIAGRAM
LL & E FEE 28 BULK SYSTEM
NO.
REVISION
BY
DATE
CHKD
APP'D
CHECKED BY
APPROVED BY
DRAWN BY
DRAWING NO.
SHT.: 5a OF 5

Exhibit 4

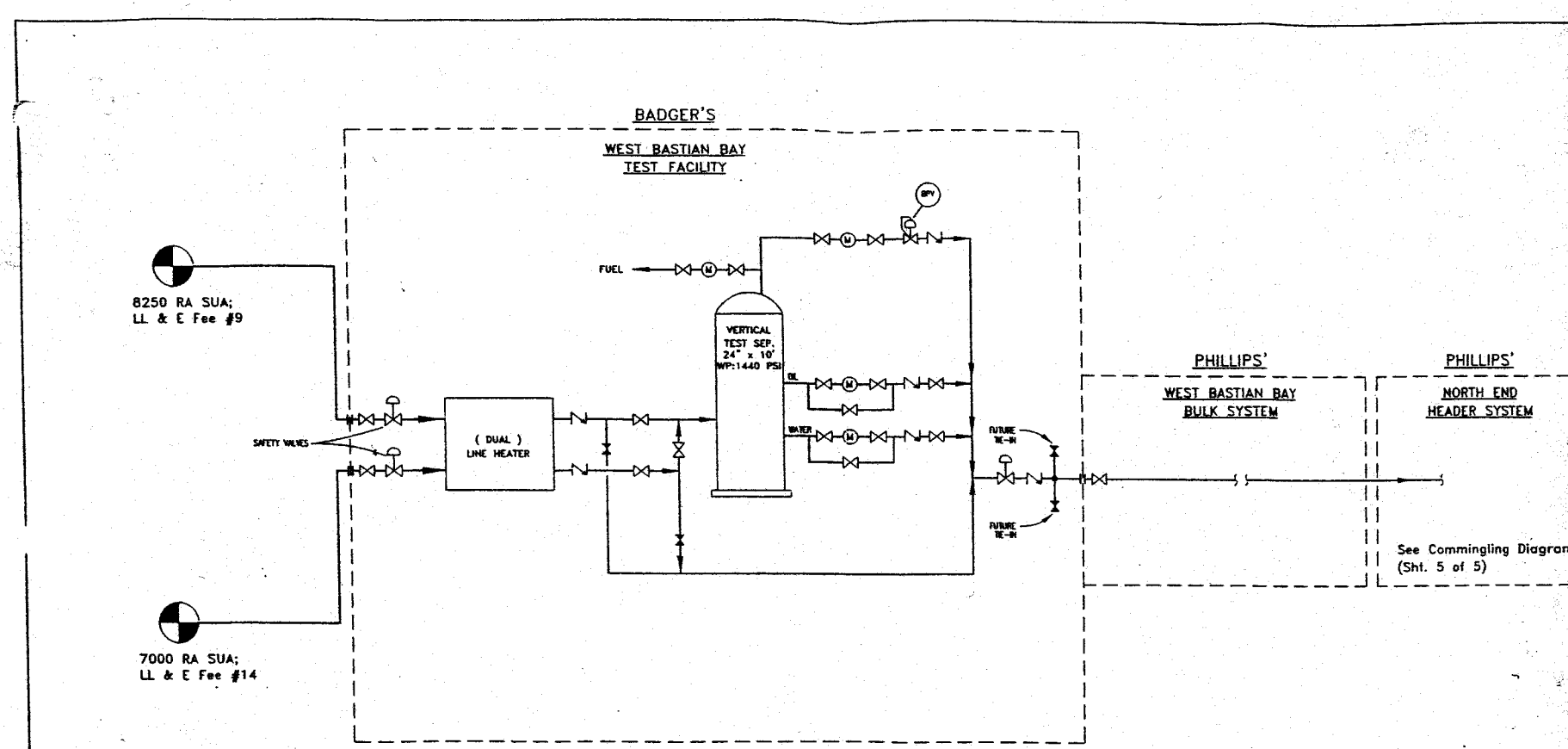

Hilcorp Energy Company

BASTIAN BAY FIELD
COMMINGLING DIAGRAM
WEST BASTIAN BAY TEST / BULK S
(PROPOSED)

NO.	REVISION	BY	DATE
		CHKD	APP'D

CHECKED BY:
APPROVED BY:
DRAWN BY:
DRAWING NO.
SH

Exhibit
5