LCK attached
#6935

19345 Point O Woods Court
Baton Rouge, Louisiana 70809
225-753-4723
225-753-4661 (fax)

Energy Research Services, Inc.

June 30, 2008

Scott Hoffman
Office of Conservation
PO Box 94275
Baton Rouge, LA 70804-9275

Re: Request for Public Hearing
Hilcorp Energy Company
Bastian Bay Consolidated Commingling Facility (Code No. 91140)
Bastian Bay Field
Plaquemines Parish, Louisiana

Dear Scott,

On behalf of Hilcorp Energy Company (Hilcorp), application is made, pursuant to Statewide Order 29-D-1, for the calling of a public hearing, after legal notice, to consider evidence relative to the issuance of an order approving the commingling in the Bastian Bay Consolidated Commingling Facility gas and/or liquid hydrocarbons produced from the following unit:

S-3 RE SUA Order 339-DD-7

This application will commingle the production from the S-3 RE SUA, at the Bastian Bay Consolidated Commingling Facility (91140). The method of measurement and allocation currently approved at the Bastian Bay Consolidated Commingling Facility is by well test.

The method of measurement and allocation of production which Hilcorp Energy Company is proposing is explained in the attached description of operations and schematic flow diagram for the Bastian Bay Consolidated Commingling Facility. As indicated, the production will be allocated by monthly well test, using methods other than gauge tanks. The subject facilities are located in the Bastian Bay Field, Plaquemines Parish, Louisiana. The methods of measurement and allocation previously approved at the facility will remain the same.

Attached are copies of the following:

- Schematic flow diagrams
- Description of operations
- Hearing fee of $755.00

The applicable authority will be covered pursuant to Title 43, Part XIX.Subpart 6, Statewide Order No. 29-D-1. 1505.2 (Well Test). The allocation meters will be tested and proven monthly for liquid hydrocarbon meters and quarterly for gaseous hydrocarbon meters.

In Hilcorp's opinion, this authorization will promote conservation of the natural resources within the State of Louisiana, will prevent waste, will protect the rights of all parties at interest and will result in substantial economic savings without results that may be in any way inconsistent with conservation policies, statutes or regulations of the State of Louisiana. Further, in the opinion of the applicant, the commingling procedure proposed will provide reasonable, accurate measurement, will not create inequities and will insure that the owner of any interest will have the opportunity to recover his just and equitable share of the reservoir content. Hilcorp requests that this matter be set for hearing at the earliest possible time and date.

A copy of this application and attachments, except the check, is being sent to Mr. Richard D. Hudson, District Manager, Office of Conservation, Lafayette, Louisiana. A copy of the legal notice will be mailed to each Interested Owner, Represented Parties, and Interested Parties having an interest in the various leases and units.

All inquiries concerning this proposal should be directed to Mr. John T. Connolly, Agent for Hilcorp Energy Company, 19345 Point O Wood Court, Baton Rouge, Louisiana 70809.

Should you have any questions, please call or email me at 753-4723 / ersses@cox.net.

Very truly yours,

John T. Connolly
Agent for Hilcorp Energy Company

Cc: Ms. Linda Trahan
Hilcorp Energy Company
PO Box 61229
Houston, Texas 77208

Mr. Richard Hudson
District Manager
Office of Conservation
825 Kaliste Saloom Road
Brandywine III, Suite 220
Lafayette, Louisiana 70508

DESCRIPTION OF OPERATIONS
BASTIAN BAY CONSOLIDATED COMMINGLING FACILITY
(CF 91140)
BASTIAN BAY FIELD
PLAQUEMINES PARISH, LOUISIANA

The Bastian Bay Consolidated Commingling Facility (BBCCF) commingles all production originating in the Bastian Bay Field, as illustrated on the attached list of leases and units and commingling schematic diagram. Production from individual wells is based on monthly well tests and designated meter readings.

Explanation of Flow

Production from Bastian Bay Field wells enters the BBCCF from individual well flowlines. Once in the BBCCF header system, production is then routed to either the three phase high pressure production separator, three phase low pressure production separator, three phase high pressure test separator, or three phase low pressure test separator.

Bulk high pressure production enters a **three phase high pressure production separator** where gas is separated from the liquid. The high pressure gas is commingled with other high pressure gas, scrubbed, dehydrated and metered for sale or used for fuel or gas lift. The water is separated, metered, and commingled with other water and routed to the SWD system for disposal by underground injection. The oil is metered and dumped from the three phase high pressure production separator to the three phase low pressure production separator.

Bulk low pressure production and liquids from the three phase high pressure production separator are routed to the **three phase low pressure production separator** where low pressure gas, oil, and water are separated. The low pressure gas is commingled with other low pressure gas from the heater treater, metered, and routed to gas compression. The compressed gas is combined with other high pressure gas, scrubbed for liquids, dehydrated and metered for sale, or used for fuel or gas lift. The oil is metered and routed to a heater treater, treated to pipeline quality, temporarily stored in fixed roof tanks, and sold by barge transport. The produced water is metered and commingled with other water and routed to the SWD system for disposal by underground injection.

High pressure test production enters a **three phase high pressure test separator** where gas is separated from the liquid. The high pressure gas is metered as it leaves the separator. The high pressure gas is then commingled with other high pressure gas, routed through the high pressure stripper, dehydrated, and metered for sales, gas lift, or fuel. The water is separated, recombined with the oil and delivered to the three phase low pressure test separator.

Low pressure test production from wells or total liquids from the three phase high pressure test separator are routed to **a three phase low pressure test separator** where low pressure gas, oil, and water are separated. The low pressure gas, water, and oil are metered as they leave the low pressure test separator. The low pressure gas is metered, commingled with other low pressure gas, routed to gas compression. The compressed gas is combined with other high pressure gas, routed through the high pressure stripper, dehydrated and metered for sale, gas lift, or fuel. The oil and water are individually metered, recombined, and delivered to the three phase low pressure production separator. From the three phase low pressure production separator the oil is routed to a heater treater,

treated to pipeline quality, temporarily stored in fixed roof storage tanks, and sold by barge transport. The produced water is metered, commingled with other water and routed to the SWD system for disposal by underground injection.

The liquids generated in the high pressure scrubber are minimal, piped to the fixed roof commingled saltwater storage tanks, and not metered. Water in the LP Inlet Scrubber, just upstream of the compressor, is dumped back to the 30 psi heater treater to clean out any minimal oil, and not metered.

All gas lift gas is individually metered at each well head, for wells on gas lift.

The oil and gas sales volumes are allocated to the wells based on well tests.

Explanation of Well Test

A wells production will be determined by monthly well test conducted for a period of not less than twenty-four (24) hours, once per month. First, the individual well stream is diverted into a test header where it flows into a test separator. From there the liquid hydrocarbons are directed to a calibrated turbine meter before going to commingled tankage where it is to be sold.

Gaseous hydrocarbons will be metered at a test separator by means of calibrated orifice meters. Tests will be conducted for a minimum of twenty-four (24) hours once per month. Low pressure gas flows from the test separator to compression. High pressure gas combines with low pressure compressed gas, scrubbed, dehydrated, and sold or used for fuel or gas lift. Gas sales will be apportioned from the sales meter.

Each liquid meter will be calibrated monthly and a meter factor will be derived from the calibration test. All liquid meters will be calibrated on a monthly basis by third party meter calibration services. Each gas meter will be calibrated quarterly by third party services. The sales volume will be allocated to the wells based on the well tests described above.

For gas lift oil wells, input gas is measured and subtracted from output gas to arrive at a net or formation gas production volume for allocation purposes.

Explanation of Allocation

Oil: Total monthly oil sales are based on the volume of oil sold and transported by barge. The oil sales tank is strapped before and after loading to determine the volume sold. . Individual oil production will be allocated back to each well based on the following formula:

Individual Oil Test Meter Volume
---------- (Total Oil Sales)
Sum of Individual Oil Test Meter Volumes

Gas: The total monthly gas is measured at the Ladd Sales Meter. Total gas, to be allocated back to each well, is the sum of gas sales, fuel gas, and gas lift gas metered volumes. Gas lift gas is deducted from each well on gas lift by subtracting the gas lift metered volumes at each well on lift. .
Individual gas production will be allocated back to each well based on the following formula:

$$\frac{\text{Individual Gas Test Meter Volume}}{\text{Sum of Individual Gas Test Meter Volumes}} \text{ (Total Gas Sales + Fuel – Well Gas Lift)}$$

In Hilcorp's opinion, this authorization will promote conservation of the natural resources within the State of Louisiana, will prevent waste, will protect the rights of all parties at interest and will result in substantial economic savings without results that may be in any way inconsistent with conservation policies, statues or regulations of the State of Louisiana. Further, in the opinion of the applicant, the commingling procedure proposed will provide reasonable, accurate measurement, will not create inequities and will insure that the owner of any interest will have the opportunity to recover his just and equitable share of the reservoir content.

John Connolly (Agent for Hilcorp Energy Company

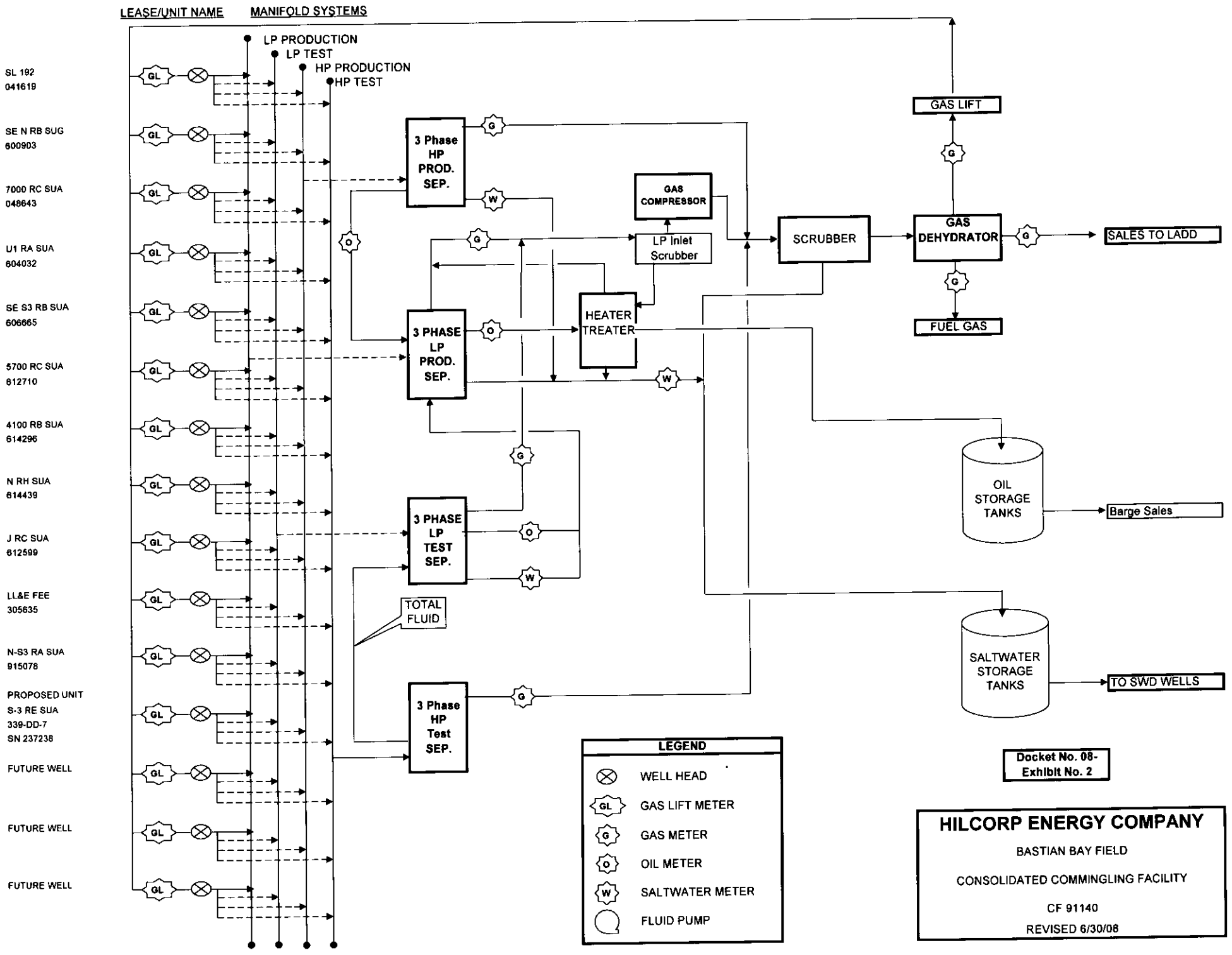
LEASE/UNIT NAME
MANIFOLD SYSTEMS
LP PRODUCTION
LP TEST
HP PRODUCTION
HP TEST
SL 192
041619
SE N RB SUG
600903
7000 RC SUA
048643
U1 RA SUA
604032
SE S3 RB SUA
606665
5700 RC SUA
612710
4100 RB SUA
614296
N RH SUA
614439
J RC SUA
612599
LL&E FEE
305635
N-S3 RA SUA
915078
PROPOSED UNIT
S-3 RE SUA
339-DD-7
SN 237238
FUTURE WELL
FUTURE WELL
FUTURE WELL
GL
3 Phase HP PROD. SEP.
3 PHASE LP PROD. SEP.
3 PHASE LP TEST SEP.
3 Phase HP Test SEP.
TOTAL FLUID
GAS COMPRESSOR
LP Inlet Scrubber
HEATER TREATER
SCRUBBER
GAS DEHYDRATOR
GAS LIFT
SALES TO LADD
FUEL GAS
OIL STORAGE TANKS
Barge Sales
SALTWATER STORAGE TANKS
TO SWD WELLS
G
O
W
LEGEND
WELL HEAD
GAS LIFT METER
GAS METER
OIL METER
SALTWATER METER
FLUID PUMP
Docket No. 08-
Exhibit No. 2
HILCORP ENERGY COMPANY
BASTIAN BAY FIELD
CONSOLIDATED COMMINGLING FACILITY
CF 91140
REVISED 6/30/08

Operators:	Conoco Phillips Hilcorp Energy Co.	Conoco Phillips Hilcorp Energy Co.
C.F. Name:	B.B. Consol. C.F.	
C.F. Code:	91140	91140
Measurement:	Well Test	Well Test
Orders:	339-5,6,7,8,9,10,13,14	
Commingled Units and Leases	SL 192 PP	K RD SUA
	SL 3155	K RD SUB
	SL 3212	K RD SUC
	SL 3279	K RD SUD
	LL&E	SE L RA SUA
	LL&E FEE	SE N RB SUA
	LL&E FEE B	SE N RB SUB
	JS AMBERCROMBIE	SE N RB SUC
	FASTERLING	SE N RB SUD
	JB FASTERLING	SE N RB SUE
	VUE	SE N RB SUI
	5700 SUA	N RD SUA
	5700 RC SUA	SE O RA SUA
	6200 RA SUA	SE O RA SUB
	6600 RA SUA	SE O RA SUC
	7000 RA SUA	SE O RA SUD
	7000 RC SUA	SE O RA SUE
	7200 RA SUA	SE O RA SUI
	7200 SUB	SE O RA SUJ
	7500 SUA	O3 RC SUB
	7800 SUA	SE P RA SUA
	7800 RB SUA	SE P RB SUA
	7800 RC SUA	SE R RA SUA
	8200 RA SUA	SE R RA SUB
	8250 RA SUA	SE R RA SUC
	8275 RA SUA	SE R RB SUA
	8600 RA SUA	SE R RC SUA
	8700 SUA	SE S RA SUA
	8700 RB SUA	SE S RA SUB
	8900 SUA	SE S RA SUC
	8900 RB SUA	SE S RA SUD
	9200 RA SUA	SE S RB SUA
	9200 RB SUA	SE S3 RA SUA
	9200 SUA	SE S3 RA SUB
	9200 SUB	SE S3 RB SUA
	9200 SUC	S3 RB SUA
	9200 SUD	S3 RC SUA
	9200 A SUA	RS RA SUA
	9250 RA SUA	7500 RD SUA
	9250 RB SUA	S3 RF SUA
	DISC 12 SUA	SE P RC SUA
	DISC 12 RB SUA	SE N RB SUG
	F RA SUA	SE O RA SUG
	F2 RA SUA	SE L RA SUB
	U1 RA SUA	BBA N RA SU
	U1 RB SUA	BBA O RC SU
	L1 RA SUA	9200 RC SU SUB
	J RC SUA	J RB SUA
	N-S3 RA SUA	10400 RA SUA
		LL&E FEE
	PROPOSED UNIT	LL&E FEE B
	S-3 RE SUA	LL&E FEE C

Docket 08-
Exhibit No. 1