LISKOW&LEWIS
A Professional Law Corporation

822 Harding Street
Post Office Box 52008
Lafayette, LA 70505
(337) 232-7424 Main
(337) 267-2399 Fax

One Shell Square
701 Poydras Street, Suite 5000
New Orleans, LA 70139
(504) 581-7979 Main
(504) 556-4108 Fax

First City Tower
1001 Fannin, Suite 1800
Houston, TX 77002
(713) 651-2900 Main
(713) 651-2908 Fax

www.Liskow.com

November 1, 2007

Richard W. Revels, Jr.
rwrevels@liskow.com

Honorable James H. Welsh
Commissioner of Conservation
Office of Conservation
P. O. Box 94275
Baton Rouge, LA 70804-4275

Re: Commingling Application
Saturday Island Commingling Facility No. 1
10700 RA SUA; LL&E No. 1 Well (SN 235342, LUW Pending)
10400 RB SUA; Wm. Chin et al No. 1 Well (SN 224481, LUW 049171)
Saturday Island Field, Jefferson Parish, Louisiana

Dear Commissioner Welsh:

Application is hereby made on behalf of **HELIS OIL & GAS COMPANY, L.L.C.** for the calling of a public hearing after legal notice to consider the following matters:

1. To permit the applicant to commingle production from the 10700 RA SUA, established by Office of Conservation Order No. 842-R, effective January 23, 2007, and from the designated unit well, the LL&E No. 1 Well, and any future wells, at its Saturday Island Commingling Facility No. 1, in the Saturday Island Field, Jefferson Parish, Louisiana, by use of monthly well tests in the manner described in the narrative and shown on the schematic attached hereto and made a part hereof.

2. To permit the applicant to commingle production from the 10400 RB SUA, established by Office of Conservation Order No. 842-E-1, effective April 25, 2000, as amended and supplemented by the 842-E Series of Office of Conservation Orders, and from the designated substitute unit well, the Wm. Chin No. 1 Well, and any future wells, at its Saturday Island Commingling Facility No. 1 (Facility Code 7939), in the Saturday Island Field, Jefferson Parish, Louisiana, by use of well tests in the manner referenced above at Item 1.

3. To grant such exceptions to Statewide Order No. 29-D-1 as are required by the proposed procedure and to grant such additional authority and approval that may be needed for such procedure.

4. To consider such other matters as may be pertinent.

It is the opinion of Helis Oil & Gas Company, L.L.C. ("Helis") that the use of well tests for allocation of production in the manner proposed will provide reasonably accurate measurement, will not create inequities, and will afford the owner of any interest the opportunity to recover his just and equitable share of production. Helis previously filed this same request administratively but was unable to obtain 100% approval from the interested parties. Therefore, Helis is requesting this matter to be set for hearing.

Attached hereto and made a part hereof are:

a) Narrative explanation of the manner in which commingling will be accomplished
b) Commingling Schematic
c) List of Interested Owners, Represented Parties, Interested Parties

Copies of this application with attachments are being mailed to all interested parties, the Commissioner of Conservation and to the Lafayette District Manager of the Office of Conservation. Finally, enclosed is our check on behalf of the applicant, Helis Oil & Gas Company, L.L.C., in the amount of $755.00 made payable to the Office of Conservation and representing the required application fee.

Sincerely,

LISKOW & LEWIS

Richard W. Revels, Jr.

Richard W. Revels, Jr.

RWRjr:dbf
Attachments
207222_1
35402.0192

cc: Mr. Richard Hudson, Lafayette District Office of Conservation
cc: All parties on attached list

HELIS OIL & GAS COMPANY, L.L.C.
NARRATIVE DESCRIPTION OF FLOW

SATURDAY ISLAND COMMINGLING FACILITY NO. 1

The proposed facility will commingle oil, gas and water production from the following described wells, with allocation by well test.

10700 RA SUA;LL&E Well No. 1 (SN 235342, LUW Pending)
10400 RB SUA;Wm Chin et al Well No. 1 (SN 224481, LUW 049171)
Saturday Island Field (7939)

PROCESS FLOW

A low pressure well flows to a low pressure (LP) separator. The separated gas is routed to be compressed to the high pressure system, separated water flows to a common water storage tank, and separated oil flows to a heater treater. The oil in the heater treater is further treated and separated with oil flowing to common oil storage tanks, and water flowing to water storage. Any minimal gas volume from the heater treater will be vented. A gas measuring orifice meter is installed on the LP separator gas outlet while liquid measuring turbine meters are installed on the LP water outlet and on the heater treater oil and water outlets.

A high pressure well flows to a high pressure (HP) separator. The separated gas goes to sales, gas-lift, and/or fuel usage. Liquids from the HP separator flow to a LP separator. The separated LP gas is routed to be compressed to the high pressure system, separated water flows to a common water storage tank, and separated oil flows to a heater treater. The oil in the heater treater is further treated and separated with oil flowing to common oil storage tanks, and water flowing to water storage. Any minimal gas volume from the heater treater will be vented. A gas measuring orifice meter is installed on the HP and LP separator gas outlets while liquid measuring turbine meters are installed on the LP water outlet and on the heater treater oil and water outlets. Any compressor scrubber liquids can be directed to flow to either of the heater treaters. The volume of the scrubber liquids is negligible, thus too small to be metered.

Oil in the common tanks will be strapped for sales before and after its contents are loaded onto a barge. The produced water tank will also be strapped before and after its contents are loaded onto a barge.

TEST FLOW

Monthly test flow for each well is the same as the normal operations described above, except that the gas and liquid meters are used to determine test flow rates. Note that, during a well test, any compressor scrubber liquids and/or re-circulated tank liquids will be diverted from the test stream to the alternate heater treater that is under normal production operations. Each well will be tested for a minimum of four consecutive hours at least once each month. While testing, basic sediment and water (BS&W) and API oil gravity measurements will be taken from the oil leg of the heater treater.

ALLOCATION

Gas production will be allocated to individual wells based on net metering as a proportion of total facility gas production. Total gas production is the summation of sales, fuel gas, and vented gas. The wells will share in the lease use fuel and vented gas charges based on the individual well's fraction of total production. Once a well's flowing pressure declines to where it needs gas lift and requires compression of the full gas well stream, then its full test gas measurement will determine its proportionate share of the distributed compression fuel. In the event gas is needed from the sales pipeline to use for gas lift or fuel use, the total metered "buy-back" gas volume would be subtracted off of the sales gas before allocating sales to the individual wells.

Oil production will be allocated to the wells based on monthly well tests as a proportion of total crude oil sales.

CALIBRATION OF METERING DEVICES

All gas is measured at each individual separator by orifice meter. The gas meters are calibrated on location on a quarterly basis by third party contract personnel. Oil is measured at the heater treater for each well by liquid turbine meter. The liquid meters are calibrated on a monthly basis by third party contract personnel. All measurements and calibrations are performed in accordance with the American Petroleum Institute (API) Manual of Petroleum Measurement Standards – Chapter 20- Allocation Measurement.

STATEMENT OF APPLICANT

In the opinion of the applicant, the commingling of gas and/or liquid hydrocarbons and the use of well testing for allocation of production in the manner proposed, will provide reasonably accurate measurement, will not create inequities, and will afford the owner of any interest the opportunity to recover his just and equitable share of the reservoir content.

Signed: Lori Hodge

for Dan McKnight
Production Manager
Helis Oil & Gas Company, L.L.C. (H172)

Date: 1/08/08 (Revision of 7/12/07 Narrative)

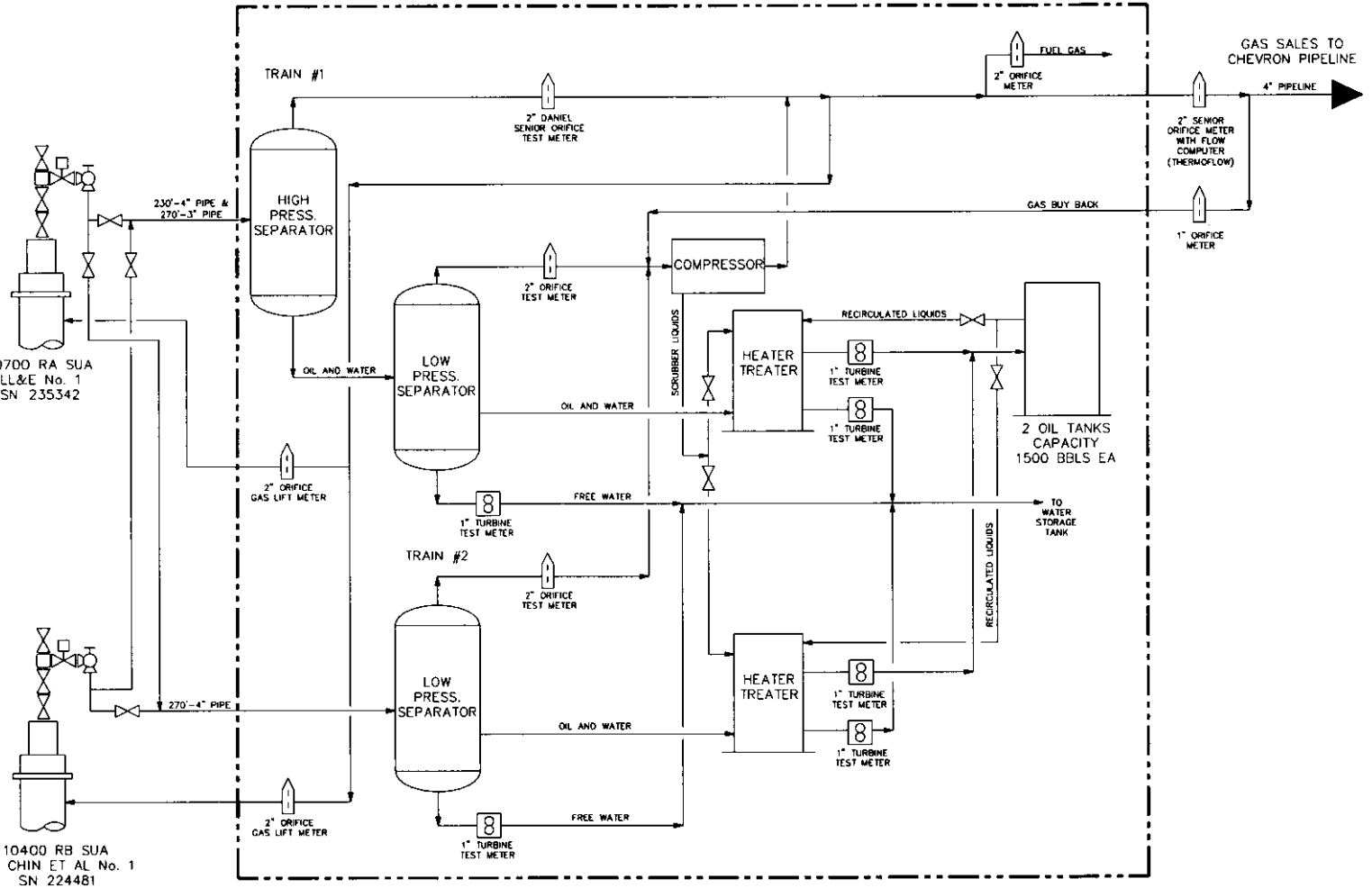

SATURDAY ISLAND PRODUCTION BARGE

NO.	REVISION	DATE	BY	CHKD	APPR
B	ISSUED FOR APPROVAL	07/11/07	JTF	LAF	LAF
A	ISSUED FOR APPROVAL	06/28/07	TMA	LAF	LAF

AUDUBON ENGINEERING
110 Veterans Blvd.
Suite 400
Metairie, Louisiana 70005
Phone: (504) 833-5000

HELIS OIL & GAS

SATURDAY ISLAND

COMMINGLING SCHEMATIC

PROJECT NUMBER	DRAWING APPROVAL				
006-1440					
DRAWN BY	TMA	6/28/07		LAF	X
CHECKED BY	LAF	6/28/07		X	X
SCALE NONE	DWG. NO. 006-XXX				