LISKOW&LEWIS
A Professional Law Corporation

822 Harding Street
Post Office Box 52008
Lafayette, LA 70505
(337) 232-7424 Main
(337) 267-2399 Fax

One Shell Square
701 Poydras Street, Suite 5000
New Orleans, LA 70139
(504) 581-7979 Main
(504) 556-4108 Fax

First City Tower
1001 Fannin Street, Suite 1800
Houston, TX 77002
(713) 651-2900 Main
(713) 651-2908 Fax

www.Liskow.com

March 18, 2010

Richard W. Revels, Jr.
rwrevels@liskow.com

Honorable James H. Welsh
Commissioner of Conservation
Office of Conservation
P. O. Box 94275
Baton Rouge, LA 70804-4275

Re: Commingling Application
Driscoll Commingling Facility No. 1
HOSS SUS, CV RA SUA, CV RA SUC
through CV RA SUG and CV RA SUDD
DRISCOLL FIELD, Bienville, Parish, Louisiana

Dear Commissioner Welsh:

Application is hereby made on behalf of **EOG RESOURCES, INC.** to obtain authority to commingle gas by continuous metering from the units listed above at its Driscoll Field Commingling Facility No. 1, Driscoll Field, Bienville Parish, Louisiana, in the manner hereinafter set forth:

1. To grant authority to commingle gas produced from:

(a) The HOSS SUS, in Driscoll Field, Bienville Parish, Louisiana, established by Office of Conservation Order No. 194-B-1, effective October 15, 1969, and the unit and alternate unit wells designated to serve that unit, now or in the future, including the Davis Bros. 20 No. 2 Well (SN 234632);

(b) The CV RA SUA, CV RA SUC through CV RA SUG, and CV RA SUDD, all in Driscoll Field, Bienville Parish, Louisiana, established by Office of Conservation Order No. 194-H, effective December 18, 1990, as amended and supplemented by the 194-H Series of Orders, and the unit and alternate unit wells designated to serve those units, now or in the future, including the Smelley 18 No. 1Well (SN 225864), Pyles Jr., et al 18 No. 1 Well (SN 233086), Davis Bros. 16 No. 1 Well (SN 232291), Davis Bros. 21 No. 1 Well (SN 230448) and Davis Bros. 21 No. 2 Well (SN 231934), Davis Bros. 20 No. 1 Well (SN 229169), J. L. McConathy et al 20 No. 1 Well (SN 232255), Brown 20 No. 1Well (SN 230486), N. L. Lawrence et al 20 No. 1 Well (SN 233872), Martin Timber Co. 20 No. 1 Well (SN 231607), McConathy Heirs 19 No. 1 Well (SN 233577), Brown-Tauzin 19 No. 1 Well (SN 230182), Brown-Tauzin 19 No. 2 Well (SN 231046), Wills 19 No. 1 Well (SN 232087), Malone et al 19 No. 1 Well (SN 236666), Mary McConathy 19 No. 1 Well (SN 237689), La Minerals Ltd. 24 No. 1 Well (SN 233950), Null, et

al 24 No. 1 Well (SN 230877), Ray H. Marr, et al 24 No. 1Well (232407), Davis Bros. 24 No. 1 Well (SN 232621), Davis Bros. 24 No. 2 Well (SN 235380), Davis Bros. 24 No. 3 Well (SN 239185), Williams 12 No. 1 Well (SN 235536), Caldwell, et al 23 No. 1 Well (SN 234799), Harrison C, et al 23 No. 1 Well (SN 231373) and Davis Bros. 23 No. 1 Well (SN 233040).

2. To use metering for allocation and measurement of gas production for all units and wells mentioned above as shown on Exhibit No. 1 and explained in the narrative attached as Exhibit No. 2 (previously submitted to Conservation under application dated September 17, 2009).

3. To grant such exceptions to Statewide Order No. 29-D-1 as are required by the proposed procedure and to grant such additional authority and approval that may be needed for such procedure.

4. To consider such other matters as may be pertinent.

It is the opinion of EOG Resources, Inc. that the commingling of gas in the manner proposed will provide reasonably accurate measurement, will not create inequities, and will afford the owner of any interest the opportunity to recover his just and equitable share of production or production proceeds from the units under consideration. EOG previously filed for administrative approval to add the aforementioned units to existing commingling authority at this facility; however, objections were received from interested parties requiring this matter to be set for hearing.

Also enclosed is a list of the names and addresses of the Interested Owners, Represented Parties and Interested Parties to whom a copy of this application will be sent. Pursuant to the Revised Rules of Procedure, such list of parties is being furnished ONLY to the Commissioner of Conservation and to the District Manager of the Shreveport District of the Office of Conservation; however, the list of parties will be provided to any party requesting a copy of it. A reasonable effort was made to ascertain the names and addresses of all Interested Owners, Represented Parties and Interested Parties.

Finally, enclosed is our check on behalf of the applicant in the amount of $503.00 made payable to the Office of Conservation and representing the difference between the filing fee previously submitted and the required hearing application fee.

Sincerely,

LISKOW & LEWIS

Richard W. Revels, Jr.

RWRjr:dbf

20072.0142
263875_1

Same unit

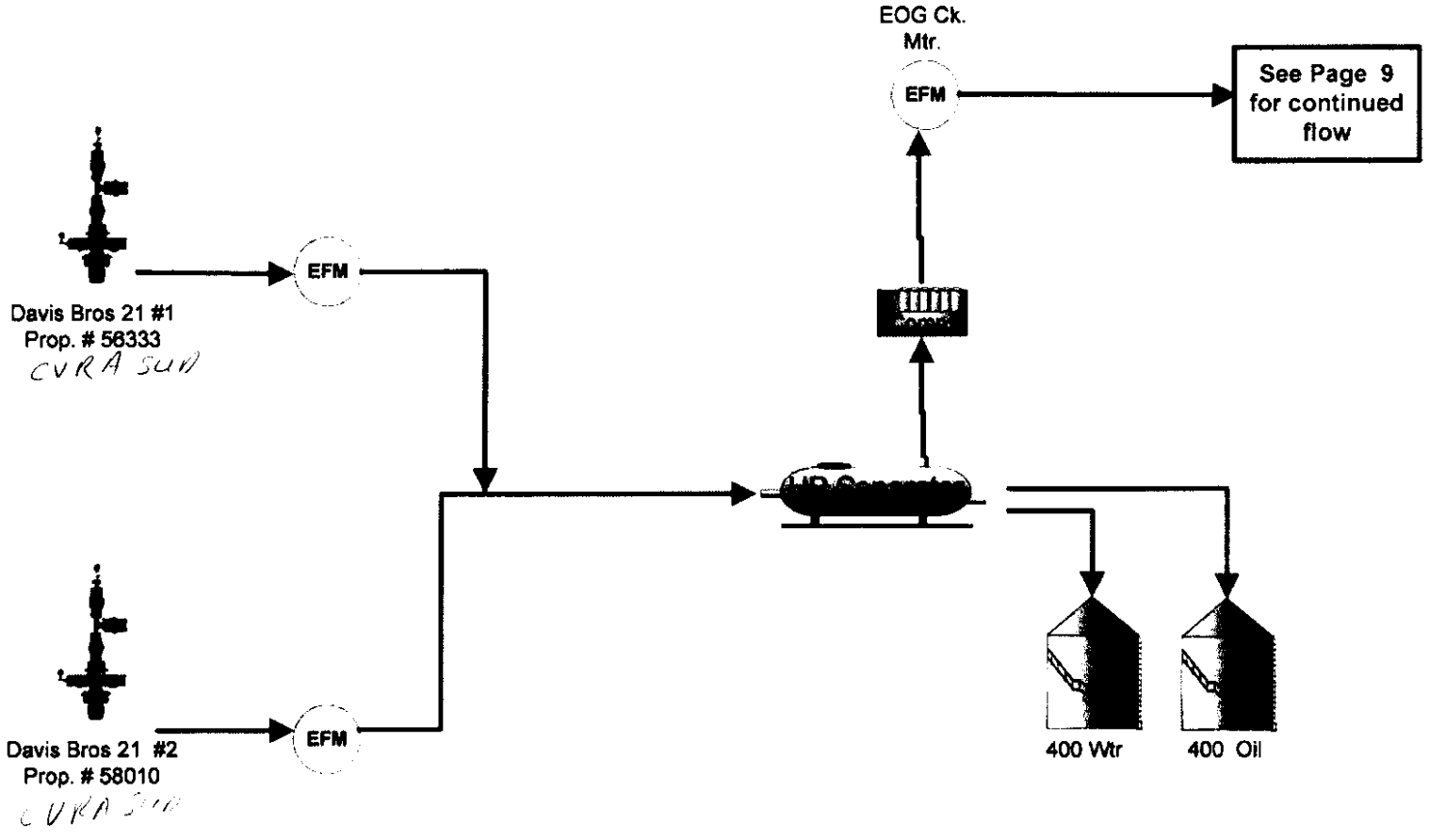

Driscoll Field
Bienville Parish, LA
8/19/2009

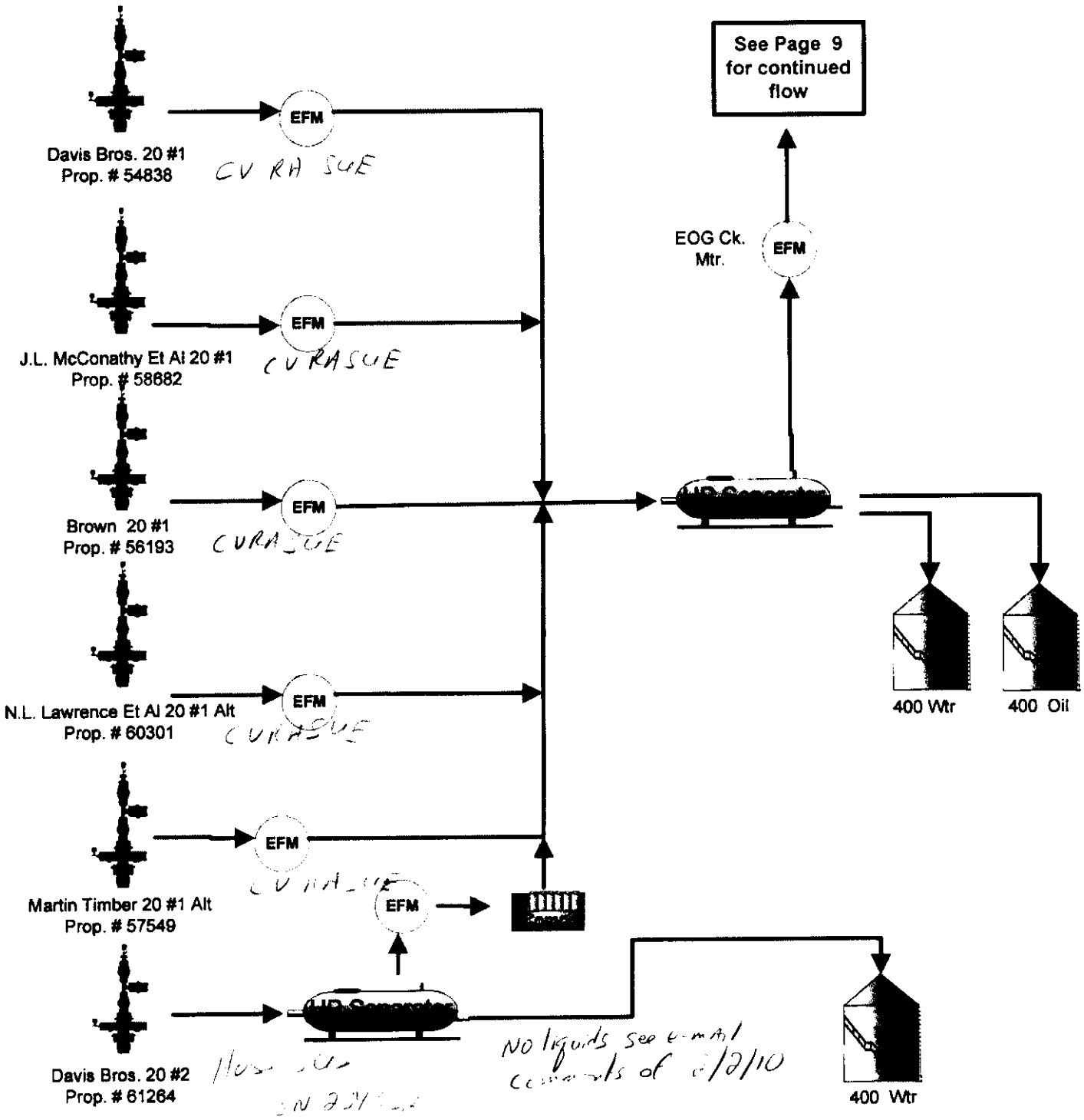

Driscoll Field
Bienville Parish, LA
8/19/2009

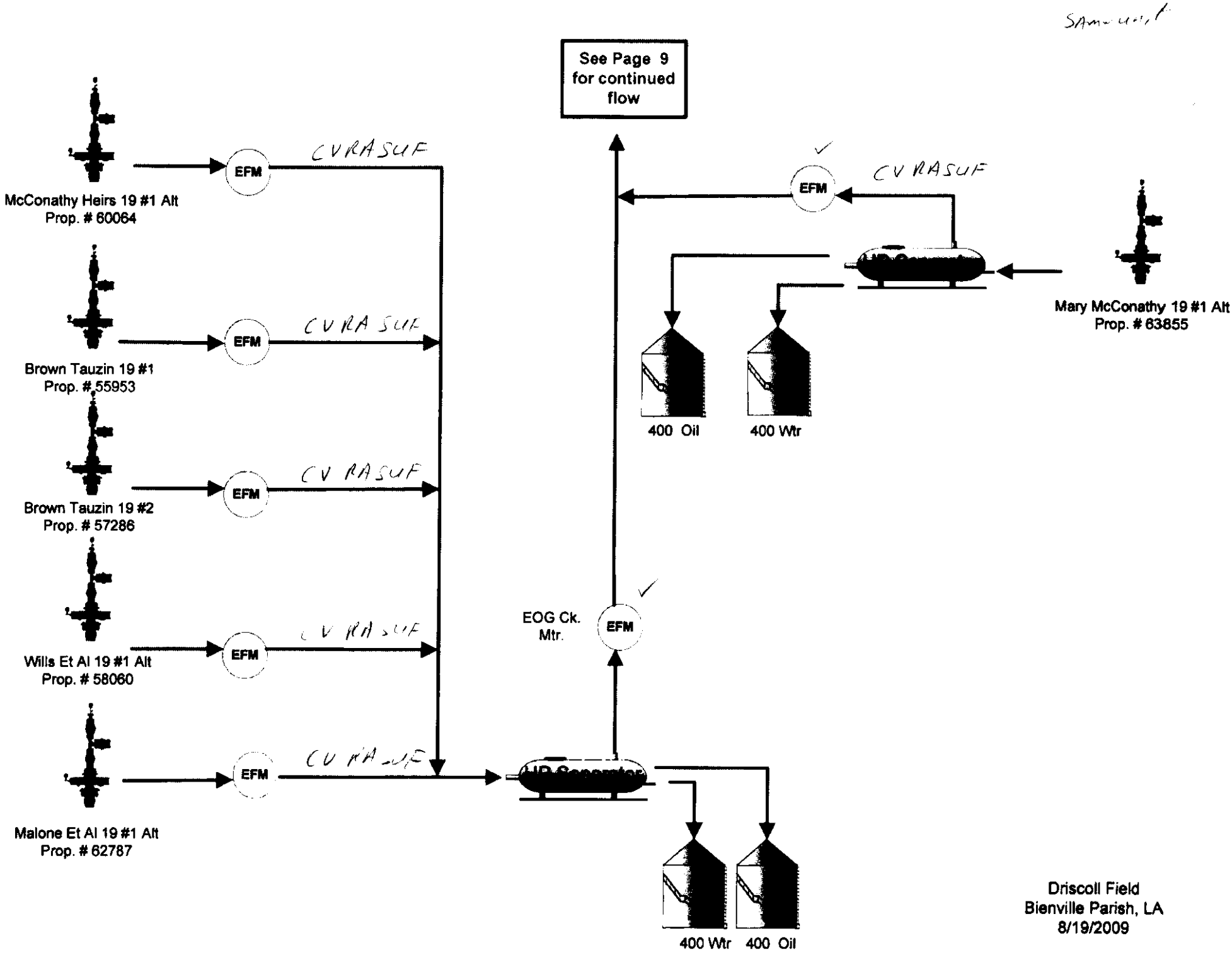

Driscoll Field
Bienville Parish, LA
8/19/2009

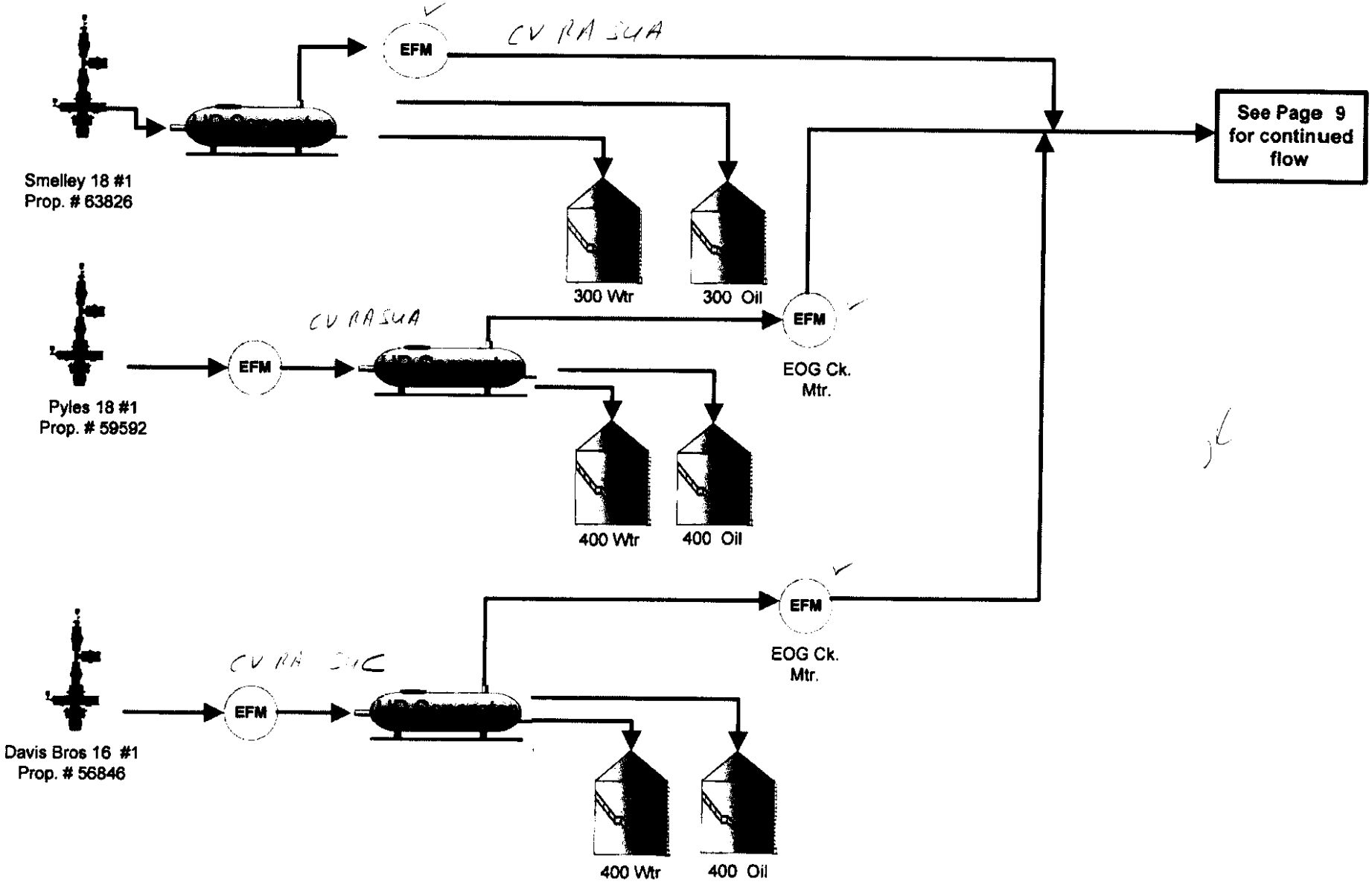

Driscoll Field
Bienville Parish, LA
8/19/2009

This well was dropped from report [illegible] 10/28/09 letter from Rick Revels

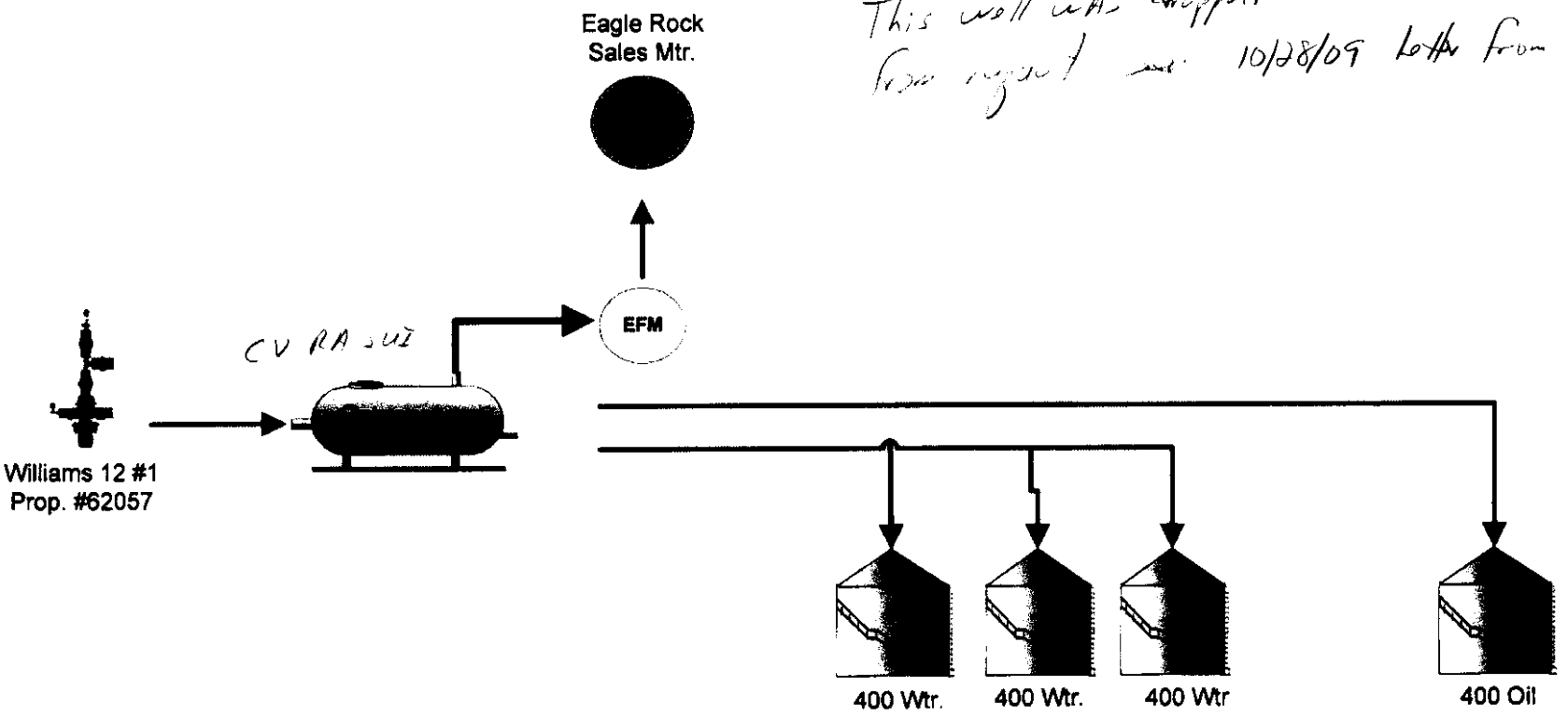

Williams 12 #1
Bienville Parish, LA
8/19/2009

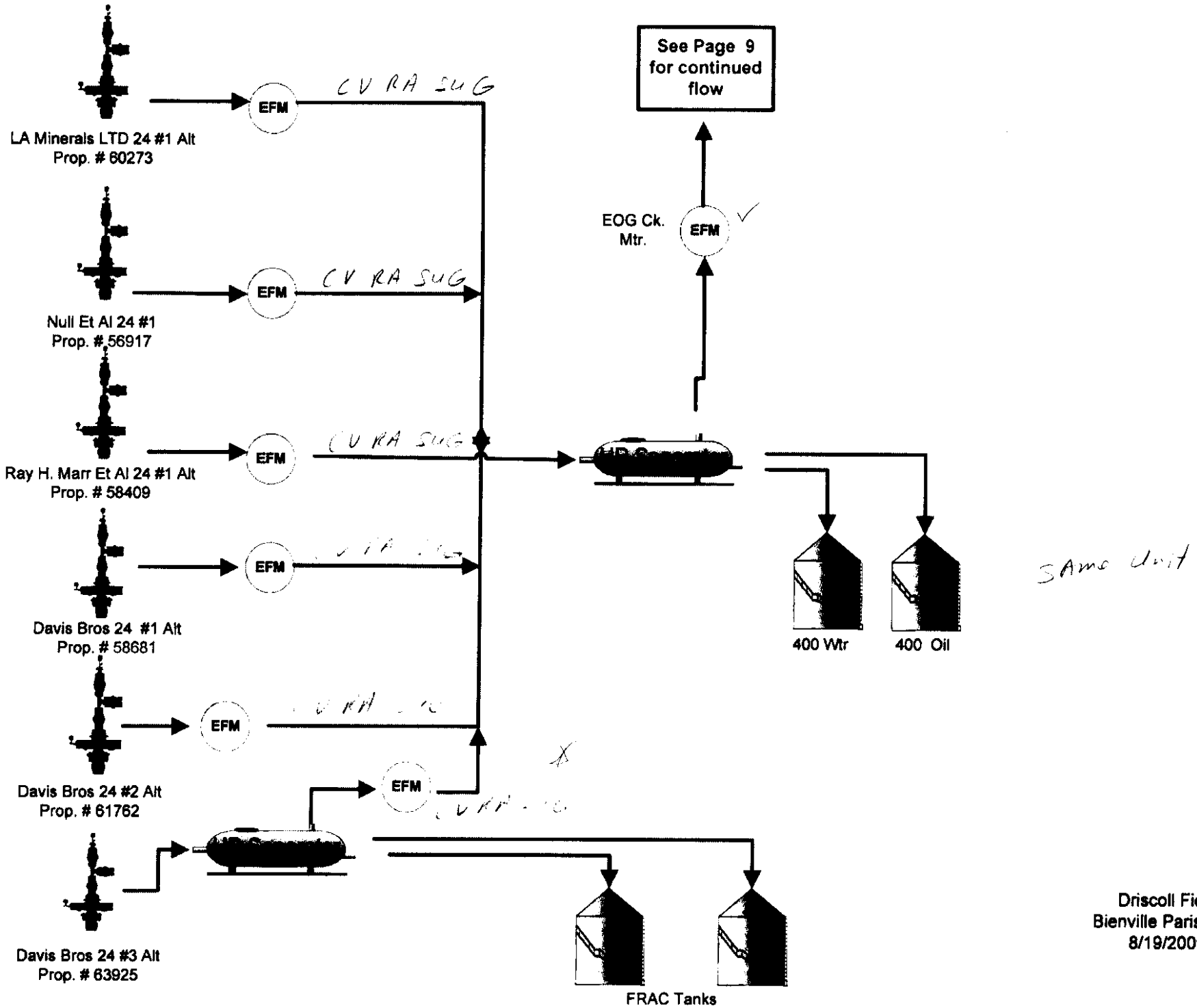

Driscoll Field
Bienville Parish, LA
8/19/2009

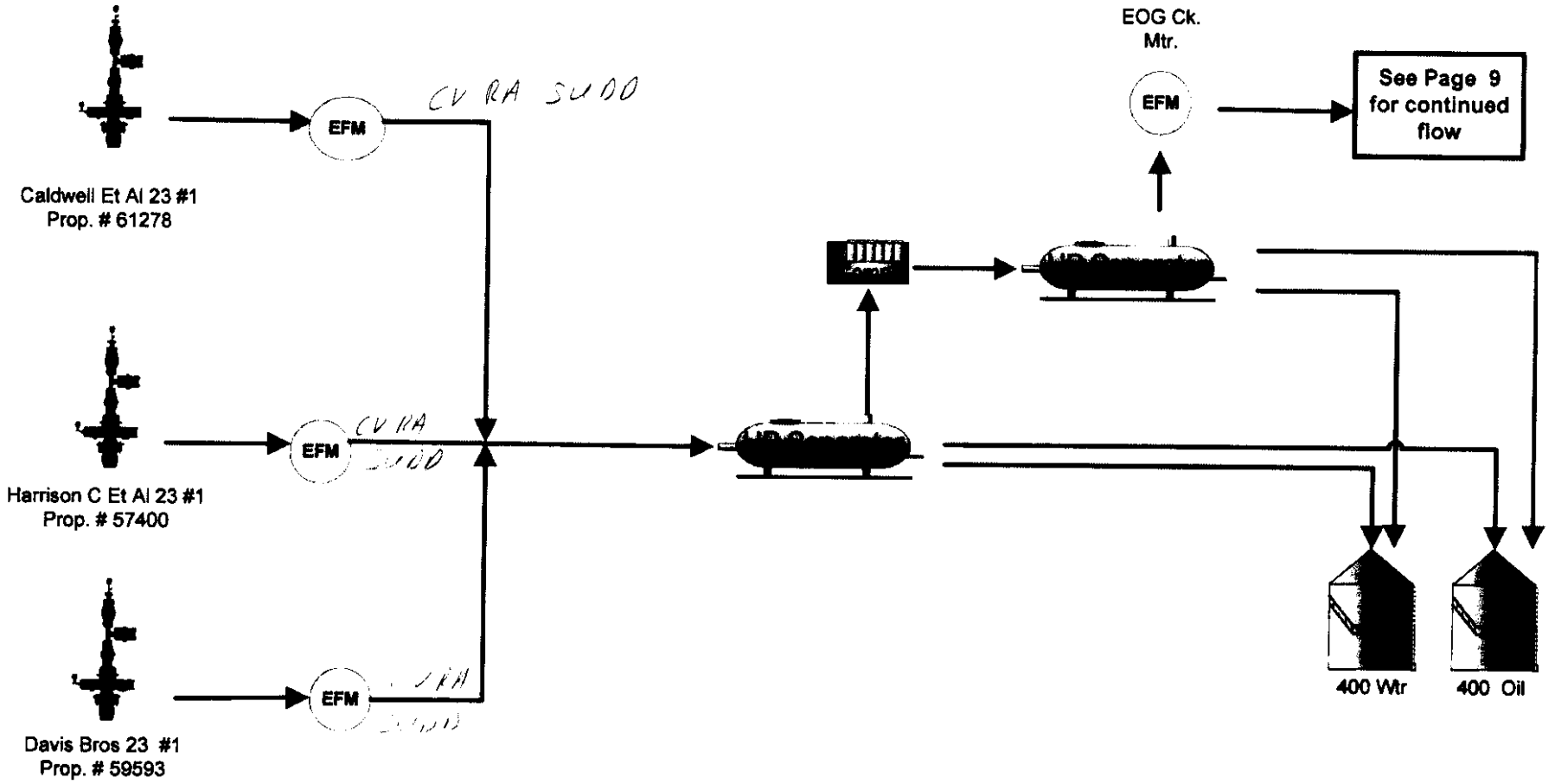

Driscoll Field
Bienville Parish, LA
8/19/2009

EOG Resources
Plant Facilities

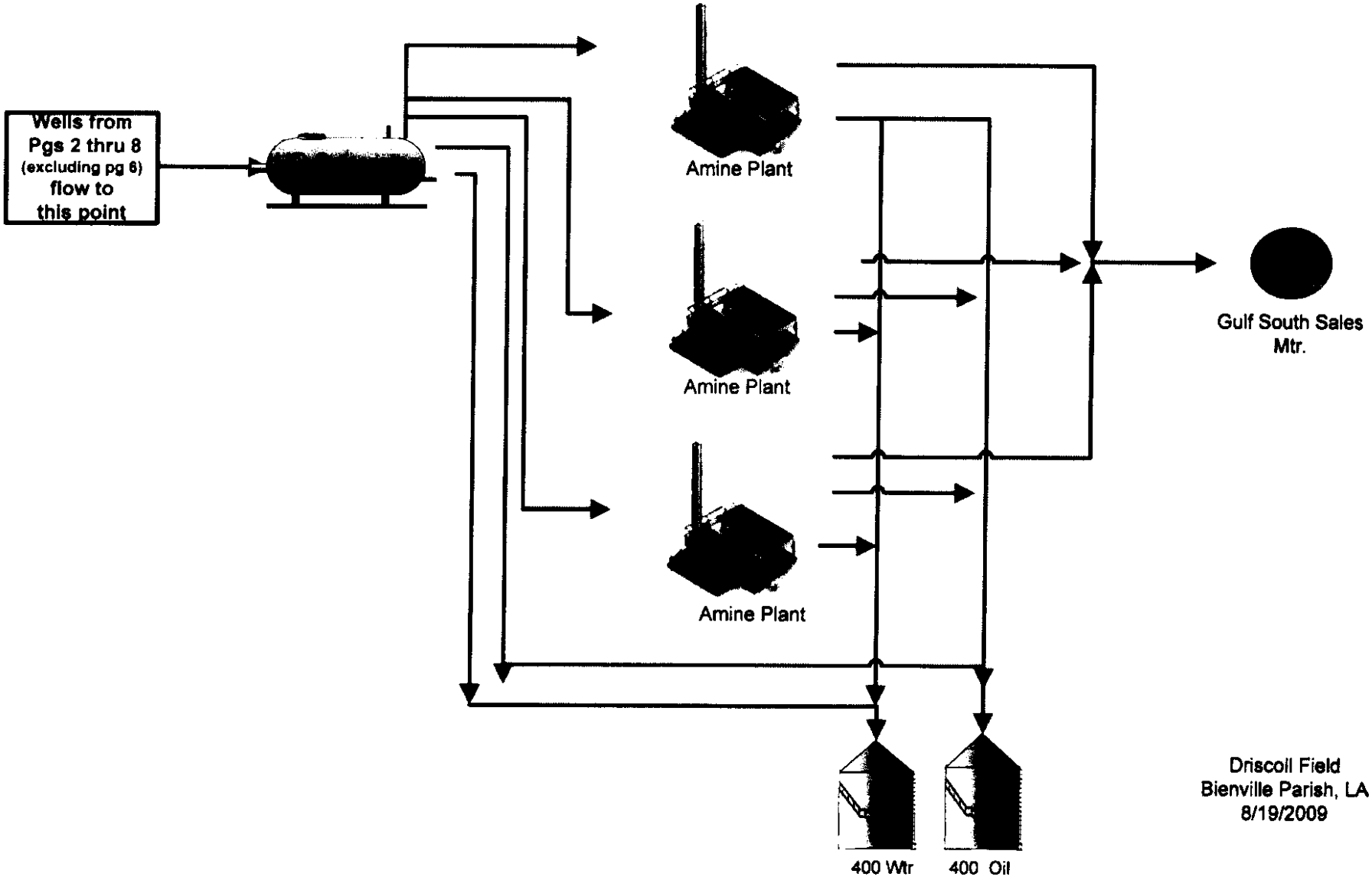

Driscoll Field
Bienville Parish, LA
8/19/2009

EOG RESOURCES
FLOW METERING SCHEMATIC NARATIVE

Driscoll Field
Bienville Parish, LA
Commingle Date July 15th, 2009

Section 21

Well CV RA SUD; *Davis Brothers 21 #1* (SN 230448) flows through and is measured by an orifice plate meter

Well CV RA SUD; *Davis Brothers 21 #2* (SN 231934) flows through and is measured by an orifice plate meter

Wells *Davis Brothers 21 #1* and *Davis Brothers 21 #2* gas streams then combine and flow through a three phase gas-liquid separator that removes water and hydrocarbon liquids to a dedicated production tank for each. The separated gas stream is then compressed though the site's compression equipment and flows through EOG Section 21 check meter before delivery to Driscoll Field's amine plant facility.

Section 20

Well *CV RA SUE; Davis Brothers 20 #1* (SN 229169) flows through and is measured by an orifice plate meter.

Well *CV RA SUE; J.L. McConathy Et Al 20 #1* (SN 232255) flows through and is measured by an orifice plate meter.

Well *CV RA SUE; Brown 20 #1* (SN 230486) flows through and is measured by an orifice plate meter

Well *CV RA SUE; N.L. Lawrence Et Al 20 #1* (SN 233872) flows through and is measured by an orifice plate meter

Well *CV RA SUE; Martin Timber Co. 20 #1* (SN 231607) flows through and is measured by an orifice plate meter

Well *HOSS SUS; Davis Brothers 20 #2* (SN 234632) flows through a two phase gas-liquid separator which removes water from the gas stream to a dedicated production tank. The separated gas is then compressed through the site's compression equipment.

Wells *Davis Brothers 20 #1, J.L. McConathy Et Al 20 #1, Brown 20 # 1, N.L. Lawrence Et Al 20 #1, Martin Timber Co. 20 #1,* and *Davis Brothers 20 #2* then combine and flow through a three phase gas-liquid separator that removes water and hydrocarbon liquids to a dedicated production tank for each. The separated gas flows through EOG section 20 check meter before delivery to Driscoll Field's amine plant facility.

Section 19

Well *CV RA SUF; McConathy Heirs 19 #1* alt (SN 233577) flows through and is measured by an orifice plate meter

Well *CV RA SUF; Brown-Tauzin 19 #1* (SN 230182) flows through and is measured by an orifice plate meter

EXHIBIT
2
(Page 1 of 3)

Well *CV RA SUF; Brown-Tauzin 19 #2 Alt* (SN 231046) flows through and is measured by an orifice plate meter

Well *CV RA SUF; Wills 19 #1 alt* (SN 232087) flows through and is measured by an orifice plate meter

Well *CV RA SUF; Malone Et Al 19 #1* Alt (SN 236666) flows through and is measured by an orifice plate meter

Well *CV RA SUF; Mary McConathy 19 #1 Alt* (SN 237689) flows through a three phase separator that removes water and hydrocarbon liquids from the gas stream to a dedicated tank for each. The separated gas then flows through and is measured by an orifice plate meter.

Wells *McConathy Heirs 19 #1 Alt, Brown Tauzin 19 #1, Brown Tauzin 19 #2, Wills Et Al 19 #1 Alt* and *Malone Et Al 19 #1 Alt* then combine and flow through a three phase gas-liquid separator that separates water and hydrocarbon liquids from the gas stream to a dedicated tank for each. The separated gas then flows through EOG section 19 check meter. This gas stream is combined with the separated gas stream from Well *Mary McConathy 19 #1 Alt* before delivery to Driscoll Field's amine plant facility.

Section 18

Well *CV RA SUA; Smelley 18 #1* (SN 225864) flows through a three phase gas-liquid separator that removes water and hydrocarbon liquids from the gas stream to a dedicated tank for each.

Well *CV RA SUA; Pyles JR Et Al 18 #1 Alt* (SN 233086) flows through and is measured by an orifice plate meter before flowing through a three phase gas-liquid separator that removes water and hydrocarbon liquids from the gas to a dedicated tank for each. The separated gas stream then flows through EOG section 18 check meter.

Well *CV RA SUC; Davis Brothers 16 #1* (SN 232291) flows through and is measured by an orifice plate meter before flowing through a three phase gas-liquid separator that removes water and hydrocarbon liquids from the gas to a dedicated tank for each. The separated gas stream then flows through EOG section 16 check meter.

Wells *Smelley 18 #1, Pyles JR Et Al 18 #1 Alt* and *Davis Brothers 16 #1* combine before delivery to Driscoll Field's amine plant facility.

Section 12

Well *CV RA SUI, Williams* 12 #1 (SN 235536) flows through a three phase gas-liquid separator that removes water and hydrocarbon liquids to three dedicated water tanks and one dedicated hydrocarbon liquid tank. The separated gas flows through and is measured by an orifice plate meter. This gas stream then flows to the Eagle Rock Sales Point meter.

Section 24

Well *CV RA SUG; LA Minerals LTD 24 #1* (SN 233950) flows through and is measured by an orifice plate meter

Well *CV RA SUG; Null Et Al 24 #1* (SN 230877) flows through and is measured by an orifice plate meter

Well *CV RA SUG; Ray H. Marr Et Al 24 #1* (SN 232407) flows through and is measured by an orifice plate meter

Well *CV RA SUG; Davis Brothers 24 #1 Alt* (SN 232621) flows through and is measured by an orifice plate meter

Well *CV RA SUG; Davis Brothers 24 #2 Alt* (SN 235380) flows through and is measured by an orifice plate meter

Well *CV RA SUG; Davis Brothers 24 #3 Alt* (SN 239185) flows through a three phase gas-liquid separator that removes water and hydrocarbon liquids from the gas stream to a dedicated tank for each. The separated gas stream then flows through and is measured by an orifice plate meter.

Wells *LA Minerals LTD 24 #1, Null Et Al 24 #1, Ray H. Marr Et Al 24 #1, Davis Brothers 24 #1 Alt, Davis Brothers 24 #2 Alt* and *Davis Brothers 24 #3* Alt combine and flow through a three phase gas-liquid separator that removes water and hydrocarbon liquid from the gas stream to a dedicated tank for each. The separated gas stream then flows through EOG section 24 check meter before delivery to the Driscoll Field amine plant facility.

Section 23

Well *CV RA SUDD; Caldwell Et Al 23 #1* (SN 234799) flows through and is measured by an orifice plate meter

Well *CV RA SUDD; Harrison C Et Al 23 #1* (SN 231373) flows through and is measured by an orifice plate meter

Well *CV RA SUDD; Davis Brothers 23 #1* (SN 233040) flows through and is measured by an orifice plate meter

Wells *Caldwell Et Al 23 #1, Harrison C Et Al 23 #1* and *Davis Brothers 23 #1* are combined and flow through a three phase gas-liquid separator that removes water and hydrocarbon liquids from the gas stream. The separated gas is then compressed by on site compression equipment and sent through another three phase separator that removes any further water and hydrocarbon liquids to the same dedicated tanks for each. This separated gas stream then flows through EOG section 23 check meter before delivery to the Driscoll Field amine plant facility.

Driscoll Field EOG Amine Plant Facility

All separated gas streams from wells in sections 16, 18, 19, 20, 21, 23 and 24 are combined and sent through a three phase separator that removes any remaining water and hydrocarbon liquids to dedicated tanks for each. The separated gas is then treated in one of three amine facilities. The discharge gas of each plant flows through a dehydration unit for moisture removal prior to sales. Fuel for these facilities is removed and measured by one orifice plate meter for all three plants. The remaining dried and treated gas from each amine plant / dehydration unit is then combined and gathered at the Gulf South Sales Point.

Allocation

Gas will be allocated to individual wells based upon the continuous metered production volume of each well's proportionate volume of the total continuously metered Gulf South sales gas volume and the continuously metered facility fuel gas volume. The facility throughput gas volume is the summation of the total Gulf South sales gas volume and the facility fuel gas volume.

Allocation methodology is as follows:

Total Allocated Facility Volume = Sec 21 check meter + Section 20 check meter + Section 19 check meter + Mary McContaby 19 #1 Alt flow meter + Smelly 18 #1 flow meter + Section 18 check meter + Section 16 check meter + Section 24 check meter + Section 23 check meter

Section 21 Check Meter

Section 21 Check Meter Allocated Sales Volume = (Total Sales Volume + Facility Fuel Gas Volume) x (Section 21 CM Volume / Total Allocated Facility Volume)

Individual Well Allocation Sales Volume = Section 21 Check Meter Allocated Sales Volume x (Individual Well Meter / Sum of Individual Well Meters)

Section 20 Check Meter

Section 20 Check Meter Allocated Sales Volume = (Total Sales Volume + Facility Fuel Gas Volume) x (Section 20 CM Volume / Total Allocated Facility Volume)

Individual Well Allocation Sales Volume = Section 20 Check Meter Allocated Sales Volume x (Individual Well Meter / Sum of Individual Well Meters)

Section 19 Check Meter

Section 19 Check Meter Allocated Sales Volume = (Total Sales Volume + Facility Fuel Gas Volume) x (Section 19 CM Volume / Total Allocated Facility Volume)

Individual Well Allocation Sales Volume = Section 19 Check Meter Allocated Sales Volume x (Individual Well Meter / Sum of Individual Well Meters)

Mary McConathy 19 #1 Alt Flow Meter

Mary McConathy 19 #1 Alt Allocated Sales Volume = (Total Sales Volume + Facility Fuel Gas Volume) x (Mary McConathy 19 #1 Alt Flow Meter Volume / Total Allocated Facility Volume)

Smelley 18 #1 Flow Meter

Smelley 18 #1 Allocated Sales Volume = (Total Sales Volume + Facility Fuel Gas Volume) x (Smelley 18 #1 Flow Meter Volume / Total Allocated Facility Volume)

Section 18 Check Meter Only Pyles well

Section 18 Check Meter Allocated Sales Volume = (Total Sales Volume + Facility Fuel Gas Volume) x (Section 18 CM Volume / Total Allocated Facility Volume)

Individual Well Allocation Sales Volume = Section 18 Check Meter Allocated Sales Volume x (Individual Well Meter / Sum of Individual Well Meters)

Section 16 Check Meter Only Davis Brolb well

Section 16 Check Meter Allocated Sales Volume = (Total Sales Volume + Facility Fuel Gas Volume) x (Section 16 CM Volume / Total Allocated Facility Volume)

Individual Well Allocation Sales Volume = Section 16 Check Meter Allocated Sales Volume x (Individual Well Meter / Sum of Individual Well Meters)

Section 24 Check Meter

Section 24 Check Meter Allocated Sales Volume = (Total Sales Volume + Facility Fuel Gas Volume) x (Section 24 CM Volume / Total Allocated Facility Volume)

Individual Well Allocation Sales Volume = Section 24 Check Meter Allocated Sales Volume x (Individual Well Meter / Sum of Individual Well Meters)

Section 23 Check Meter

Section 23 Check Meter Allocated Sales Volume = (Total Sales Volume + Facility Fuel Gas Volume) x (Section 23 CM Volume / Total Allocated Facility Volume)

Individual Well Allocation Sales Volume = Section 23 Check Meter Allocated Sales Volume x (Individual Well Meter / Sum of Individual Well Meters)

Liquid hydrocarbon production will be allocated to each well based upon each individual well's production tank measurement. All allocations will be in accordance with the API Manual of Petroleum Measurement Standards, Chapter 20 – Allocation Measurement Standards.

Measurement and Calibration

All gas measurements are being made with an individual orifice plate flow meter. The gas meters are calibrated based upon gas volumes per as follows:

> 1000 MCFD, meters are calibrated monthly
< 1000 MCFD, meters are calibrated quarterly

Statement of Applicant

In the opinion of the applicant, the commingling of gas and/or liquid hydrocarbons and the use of continuous metering in the manner proposed, will provide reasonably accurate measurement, will not create inequities, and will afford the owner of any interest the opportunity to recover his just and equitable share of the production.

Signed: _____

Phillip Stevens
Group Lead, Production
EOG Resources, Tyler Division

Date: 9/1/09